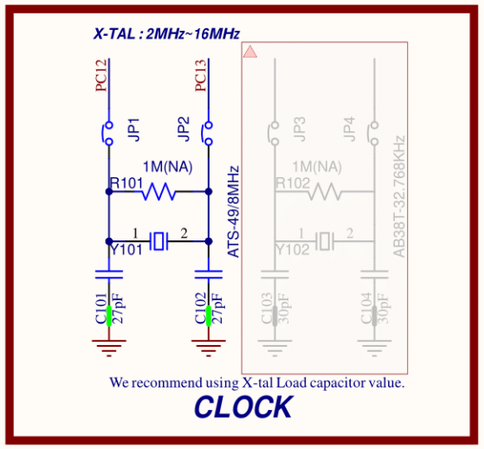

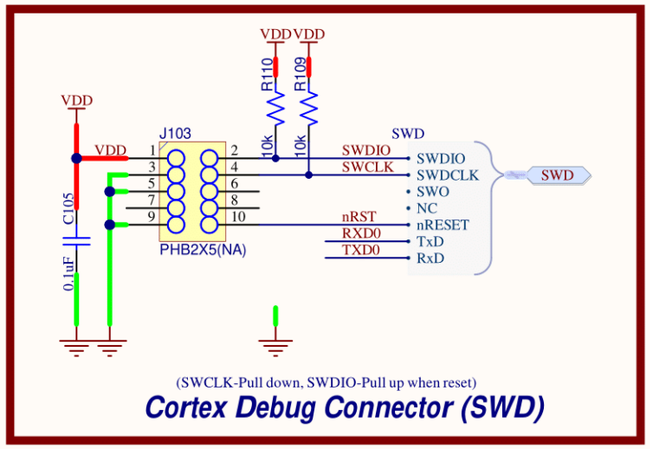

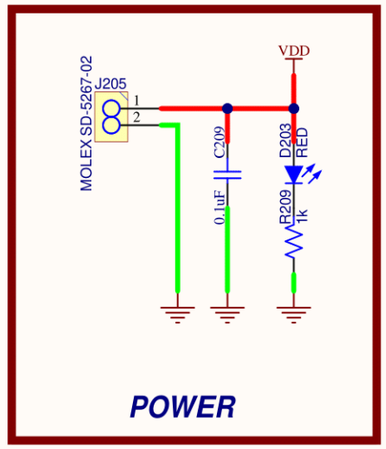

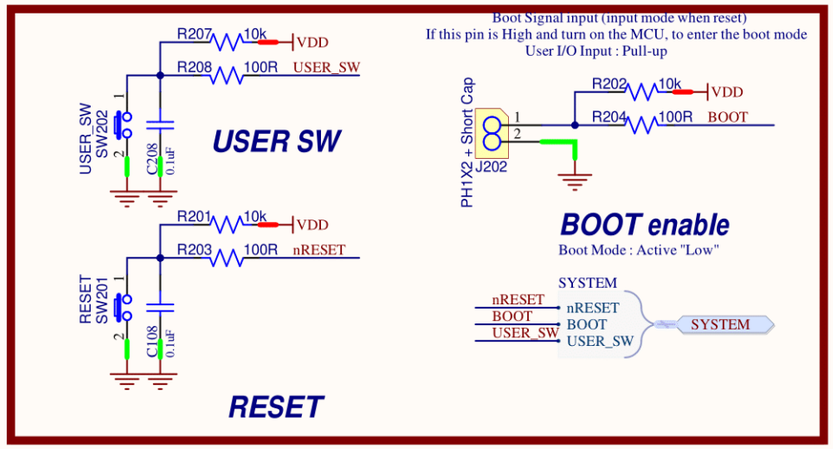

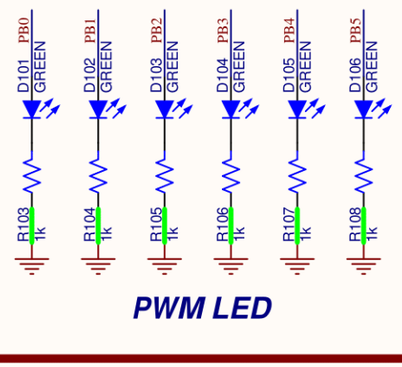

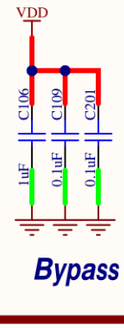

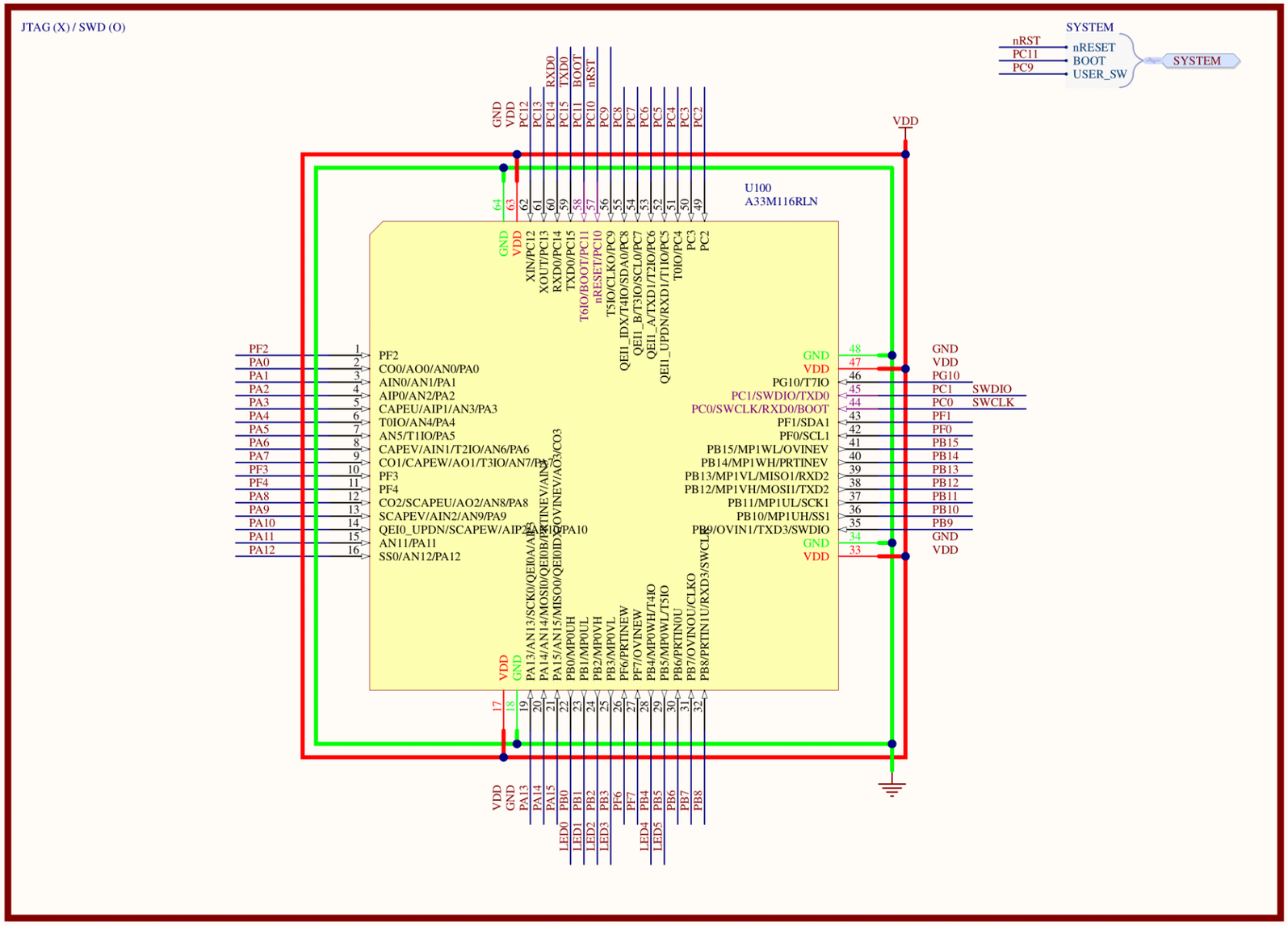

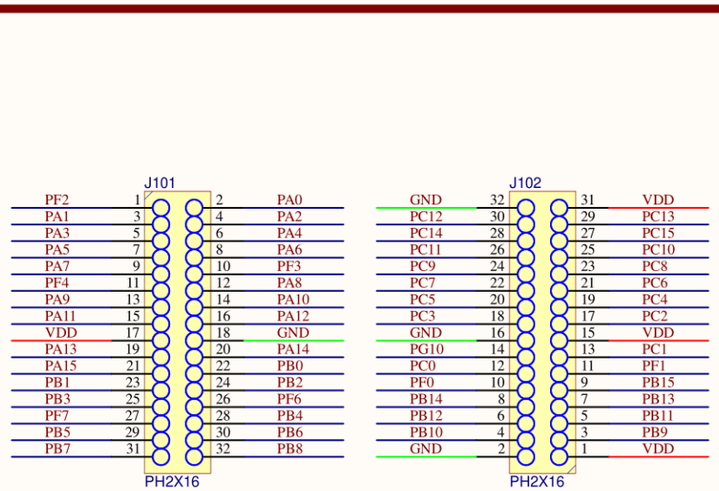

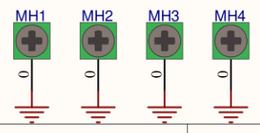

Title : STK-A33M116-RLN-A			ABOV Semiconductor Co., Ltd. 93-Io, gag-li 1 OChang-eub, CheongWon-gu, Cheongju-si, Chungbuk, Korea (363-885)
Size : A3	Number: *	Revision: Rev 1.1	
Date: 2021-2-15(월) Time: 오후 3:29:30		Sheet * of *	
File : STK-A33M116-RLN-A.SchDoc			

LOGO

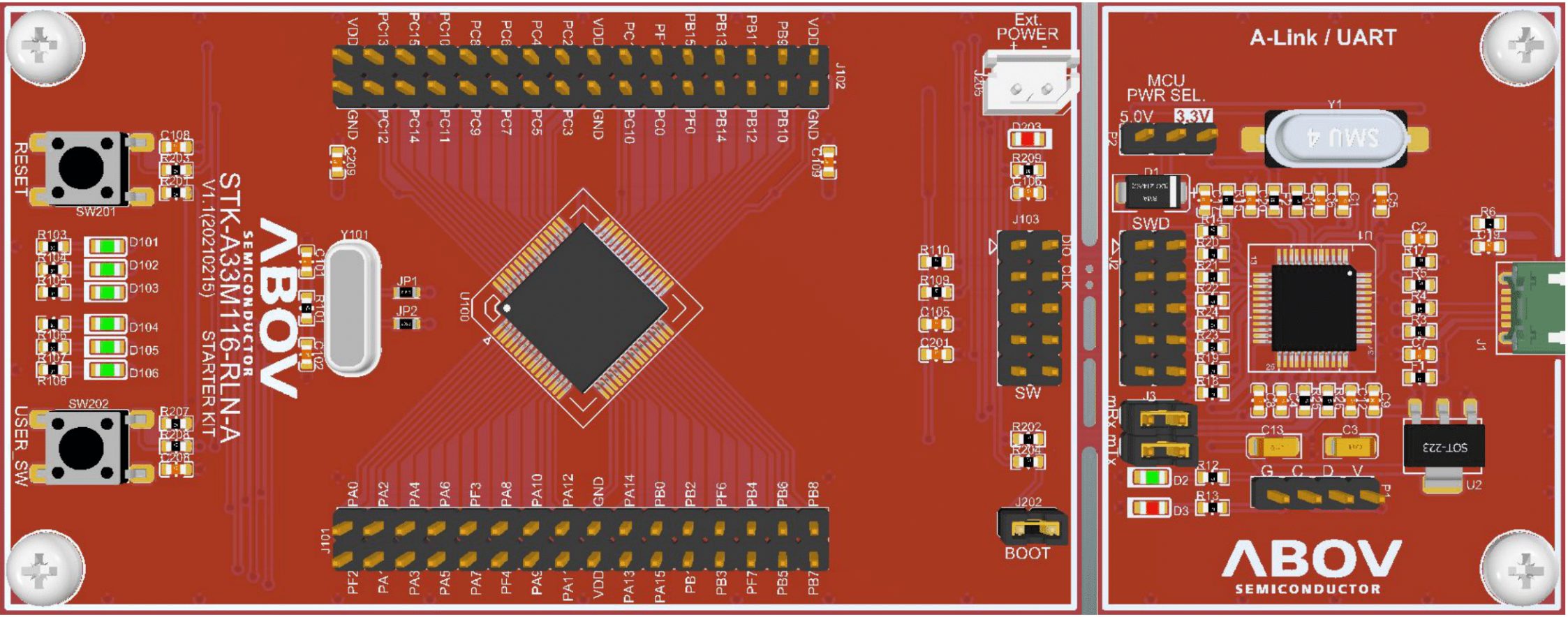

STK-A33M116-RLN-A
V1.1(20210215)
STARTER KIT
ABOV
SEMICONDUCTOR
RESET
USER_SW
SW201
SW202
Y101
U100
J101
J102
J103
J202
J205
Ext.
POWER
SW
BOOT
A-Link / UART
MCU
PWR SEL.
5.0V
3.3V
SWD
SMU 4
SOT-223
ABOV
SEMICONDUCTOR

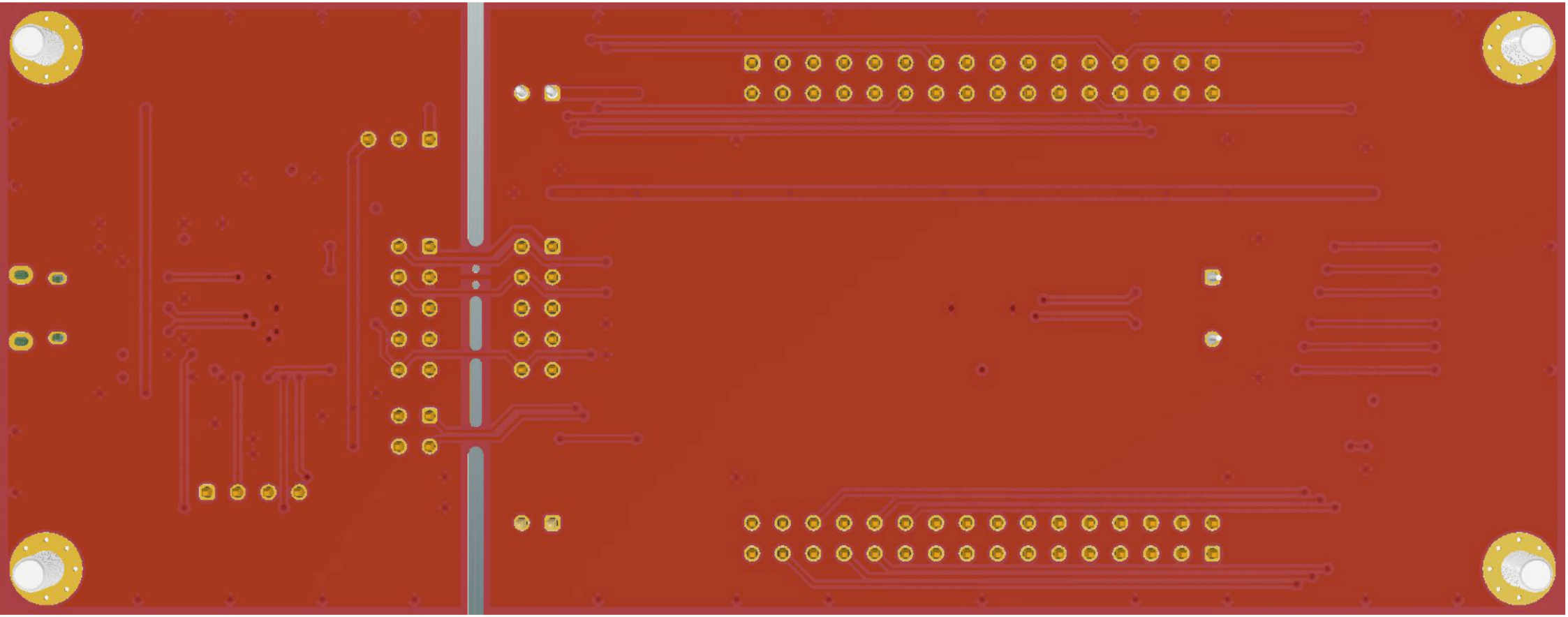

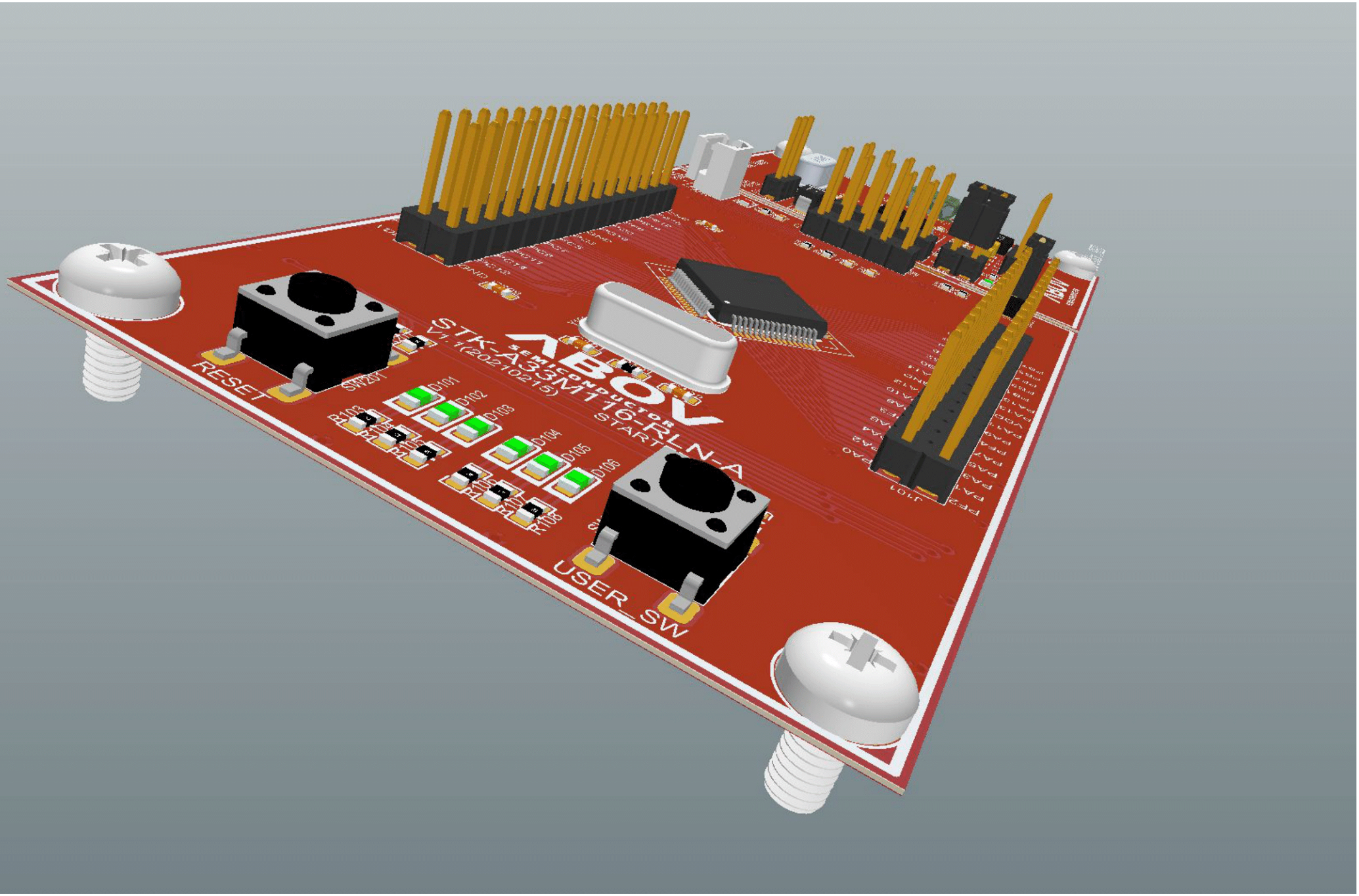
ABOV
SEMICONDUCTOR
STK-A33M116-RLN-A
V1.1(20210215)
RESET
SW201
D101
D102
D103
D104
D105
D106
R103
R105
USER_SW