Ultra-Low Power Cortex-M0+ Microcontroller Flash 32/16KB, SRAM 4KB, ADC, Temperature Sensor

UM Rev. 1.10

Introduction

A31L22x User's manual contains complete information of the A31L22x MCU for application developers who use A31L222 or A31L221 for their specific needs.

The ultra-low power A31L22x series is a 32-bit general purpose microcontroller for various appliances. To meet the requirements for the complexity and high performance in consumer electronics, the ultra-low power A31L22x series incorporates ARM's high-speed 32-bit Cortex-M0+ Core, and has up to 32KB of Flash memory, and 4KB of SRAM.

As shown in Figure 1, the ultra-low power A31L22x series has various peripherals such as 16-bit timers, Real timer and calendar, 12-bit ADC, Comparator, CRC generator, UART, USART, LPUART, I2C, SPI, etc. It also has a POR, LVR, LVI, and an internal RC oscillator.

The A31L22x series supports SLEEP mode and DEEP SLEEP mode to reduce power consumption.

Figure 1. Conceptual Block Diagram of A31L22x Series

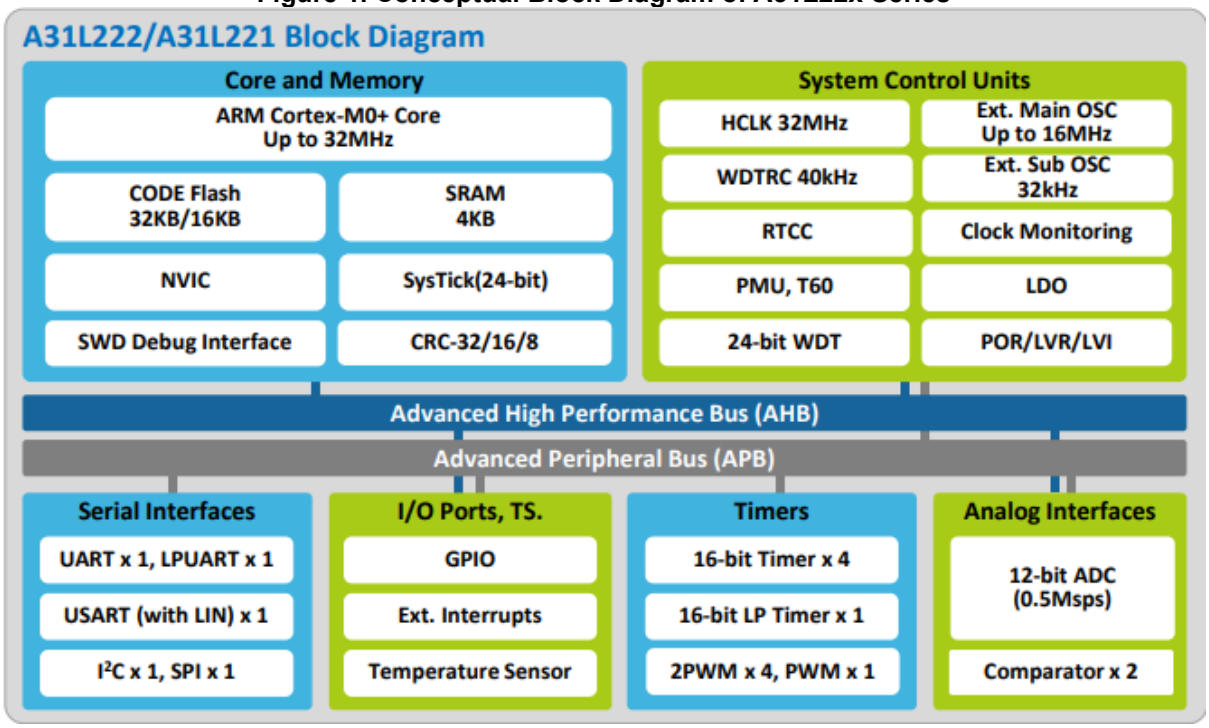

Contents

1 Description 17
1.1 Device overview 18
1.2 Block diagram 19
1.3 Functional description 20
1.3.1 ARM Cortex-M0+ 20
1.3.2 Nested Vector Interrupt Controller (NVIC) 20
1.3.3 32KB internal Code Flash memory 20
1.3.4 4KB internal SRAM 20
1.3.5 Boot logic 20
1.3.6 System Control Unit (SCU) 20
1.3.7 Power Management Unit (PMU) 20
1.3.8 24-bit Watchdog Timer (WDT) 20
1.3.9 Multi-purpose 16-bit timer 20
1.3.10 Real Time Clock and Calendar (RTCC) 21
1.3.11 USART (UART and SPI) 21
1.3.12 Inter-integrated Circuit (I2C) interface 21
1.3.13 Serial Peripheral Interface (SPI) 22
1.3.14 Universal Asynchronous Receiver/Transmitter (UART) 22
1.3.15 Low Power Universal Asynchronous Receiver/Transmitter (LPUART) 22
1.3.16 General PORT I/Os (GPIO) 22
1.3.17 12-bit Analog-to-Digital Converter (ADC) 22
1.3.18 Comparator 22
1.3.19 Cyclic Redundancy Check (CRC) generator 22
1.3.20 Temperature Sensor (TS) 22
2 Pinouts and pin descriptions 23
2.1 Pinouts 23
2.2 Pin description 26
3 Central Processing Unit (CPU) 29
3.1 Cortex®–M0+ core 29
3.2 Interrupt controller 30
3.3 Registers 33
3.3.1 INTC_PnTRIG: port n interrupt trigger selection register 33
3.3.2 INTC_PnCR: port n interrupt control register 34
3.3.3 INTC_PnFLAG: port n interrupt flag register 34
3.3.4 INTC_EINTnCONF1: external interrupt n configuration register 1 (n= 0 to 3) 35
3.3.5 INTC_MSK: interrupt source mask register 37
4 Control memory organization 39
4.1 Internal SRAM 40
4.2 Boot mode 41
4.2.1 Boot mode pins 41
4.2.2 Boot mode connection 41
4.3 Flash memory 42
4.3.1 Registers 44
4.3.1.1 FMC_ADR: Flash memory address register 44
4.3.1.2 FMC_IDR1: Flash memory identification register 1 45
4.3.1.3 FMC_IDR2: Flash memory identification register 2 45
4.3.1.4 FMC_CR: Flash memory control register 46
4.3.1.5 FMC_BCR: Flash memory configure area bulk erase control register 47
4.3.1.6 FMC_ERFLAG: Flash memory error flag register 47

4.3.2 Procedure for Flash memory operation 48
4.3.2.1 Page Erase procedure 48
4.3.2.2 Byte/Page Write procedure 48
4.3.2.3 Flash Bulk Erase procedure 49
4.3.2.4 Flash Bulk Erase procedure including configure option area 49
4.4 Configure option area 50
4.4.1 Configure option page 51
4.4.1.1 TS_FREQ_T30: Temperature Sensor output frequency 1 52
4.4.1.2 TS_FREQ_T85: Temperature Sensor output frequency 2 52
4.4.1.3 TS_FREQ_T105: Temperature Sensor output frequency 3 52
4.4.1.4 CONF_MF1CNFIG: configuration for manufacture information 1 53
4.4.1.5 CONF_MF2CNFIG: configuration for manufacture information 2 53
4.4.1.6 CONF_MF3CNFIG: configuration for manufacture information 3 53
4.4.1.7 CONF_MF4CNFIG: configuration for manufacture information 4 54
4.4.1.8 CONF_RPCNFIG: configuration for Read Protection 54
4.4.1.9 CONF_WDTCNFIG: configuration for Watchdog Timer 55
4.4.1.10 CONF_LVRCNFIG: configuration for Low Voltage Reset 56
4.4.1.11 CONF_CNFIGWTP1: Erase/Write Protection for Configure Option Page 1/2/3 56
4.4.1.12 CONF_FMWTP1 Erase/Write Protection 1 for Flash memory 57
5 System Control Unit (SCU) 58
5.1 SCU block diagram 58
5.2 Clock system 59
5.2.1 HCLK clock domain 60
5.2.2 Miscellaneous clock domain 61
5.2.3 PCLK clock domain 61
5.2.4 Clock configuration procedure 61
5.3 Reset 63
5.3.1 Cold reset 64
5.3.2 Warm reset 65
5.3.3 LVR reset 66
5.4 Operation mode 67
5.4.1 RUN mode 67
5.4.2 SLEEP mode 67
5.4.3 DEEP SLEEP mode 67
5.4.4 SHUT DOWN mode 67
5.5 Pin description for SCU 68
5.6 Registers 69
5.6.1 SCU_VENDORID: vendor id register 71
5.6.2 SCU_CHIPID: chip ID register 71
5.6.3 SCU_REVNR: revision number register 71
5.6.4 SCU_PMREMAP: program memory remap register 72
5.6.5 SCU_BTPSCR: boot pin status and control register 72
5.6.6 SCU_RSTSSR: reset source status register 73
5.6.7 SCU_NMISRCR: NMI source selection register 75
5.6.8 SCU_SWRSTR: software reset register 75
5.6.9 SCU_SRSTVR: system reset validation register 76
5.6.10 SCU_WUTCR: wake-up timer control register 76
5.6.11 SCU_WUTDR: wake-up timer data register 77
5.6.12 SCU_HIRCTRM: high frequency internal RC trim register 78
5.6.13 SCU_WDTRCTRM: Watchdog Timer RC trim register 79

5.6.14 SCU_SCCR: system clock control register 80
5.6.15 SCU_CLKSRCR: clock source control register 81
5.6.16 SCU_SCDIVR1: system clock divide register 1 82
5.6.17 SCU_SCDIVR2: system clock divide register 2 83
5.6.18 SCU_CLKOCR: clock output control register 84
5.6.19 SCU_CMONCR: clock monitoring control register 85
5.6.20 SCU_PPCLKEN1: peripheral clock enable register 1 87
5.6.21 SCU_PPCLKEN2: peripheral clock enable register 2 88
5.6.22 SCU_PPCLKSR: peripheral clock selection register 89
5.6.23 SCU_PPRST1: peripheral reset register 1 90
5.6.24 SCU_PPRST2: peripheral reset register 2 91
5.6.25 SCU_XSOSC: sub oscillator control register 92
5.6.26 SCU_LVICR: low voltage indicator control register 93
5.6.27 SCU_LVRCR: low voltage reset control register 94
6 Power Management Unit (PMU) 95
6.1 PMU block diagram 95
6.2 Functional table on current mode 96
6.3 Wake-up time table 97
6.4 Registers 98
6.4.1 PMU_PWRCR: power management control register 99
6.4.2 PMU_PWRSR: power management status register 100
6.4.3 PMU_APUPDCR: power port A pull-up/down control register 101
6.4.4 PMU_CPUPDCR: power port C pull-up/down control register 101
6.4.5 PMU_DPUPDCR: power port D pull-up/down control register 102
6.4.6 PMU_EPUPDCR: power port E pull-up/down control register 102
6.4.7 PMU_BKRx: back-up register x (x = 0 to 31) 103
7 Port Control Unit (PCU) and GPIO 104
7.1 PCU and GPIO block diagrams 104
7.2 I/O port block diagram 105
7.3 Pin multiplexing 106
7.4 Registers 107
7.4.1 Pn_MOD: port n mode register 108
7.4.2 Pn_TYP: port n output type selection register 108
7.4.3 PA_AFSR1: port A alternative function selection register 1 109
7.4.4 PC_AFSR1: port C alternative function selection register 1 110
7.4.5 PD_AFSR1: port D alternative function selection register 1 111
7.4.6 PE_AFSR1: port E alternative function selection register 1 112
7.4.7 Pn_PUPD: port n Pull-up/down resistor selection register 113
7.4.8 Pn_INDR: port n input data register 113
7.4.9 Pn_OUTDR: port n output data register 114
7.4.10 Pn_BSR: port n output bit set register 114
7.4.11 Pn_BCR: port n output bit clear register 115
7.4.12 Pn_OUTDMSK: port n output data mask register 115
7.4.13 Pn_DBCR: port n debounce control register 116
7.5 Functional description 117
8 Watchdog Timer (WDT) 119
8.1 WDT block diagram 119
8.2 Registers 120
8.2.1 WDT_CR: Watchdog Timer control register 121
8.2.2 WDT_SR: Watchdog Timer status register 122

8.2.3 WDT_DR: Watchdog Timer data register 122
8.2.4 WDT_CNT: Watchdog Timer counter register 123
8.2.5 WDT_WINDR: Watchdog Timer window data register 123
8.2.6 WDT_CNTR: Watchdog Timer counter reload register 124
8.3 Functional description 125
8.3.1 Timing diagram 125
8.3.2 Pre-scale table 125
9 Real Timer Clock and Calendar (RTCC) 127
9.1 RTCC block diagram 127
9.2 Registers 128
9.2.1 RTC_CR: RTCC control register 129
9.2.2 RTC_ECR: RTCC time error correction register 131
9.2.3 RTC_SCNT: RTCC sub counter register 132
9.2.4 RTC_SEC: RTCC second counter register 132
9.2.5 RTC_MIN: RTCC minute counter register 133
9.2.6 RTC_HOUR: RTCC hour counter register 133
9.2.7 RTC_DAY: RTCC day counter register 135
9.2.8 RTC_WEEK: RTCC week counter register 136
9.2.9 RTC_MONTH: RTCC month counter register 136
9.2.10 RTC_YEAR: RTCC year counter register 137
9.2.11 RTC_ALMIN: RTCC alarm minute counter register 137
9.2.12 RTC_ALHOUR: RTCC alarm hour counter register 138
9.2.13 RTC_ALWEEK: RTCC alarm week counter register 139
9.3 Functional description 140
9.3.1 Time error correction 140
9.3.2 Time error correction example 1 141
9.3.2.1 Measuring the oscillation frequency 141
9.3.2.2 Calculating the correction value 141
9.3.2.3 Calculating the values to be set to registers 141
9.3.3 Time error correction example 2 142
9.3.3.1 Measuring the oscillation frequency 142
9.3.3.2 Calculating the correction value 142
9.3.3.3 Calculating the values to be set to registers 142
10 Timer counter 40/41/42/43 143
10.1 Timer counter 40/41/42/43 block diagram 144
10.2 Pin description for timer counter 40/41/42/43 145
10.3 Registers 146
10.3.1 TIMERn_CR: timer/counter n control register 147
10.3.2 TIMERn_PDR: timer/counter n period data register 149
10.3.3 TIMERn_ADR: timer/counter n A data register 149
10.3.4 TIMERn_BDR: timer/counter n B data register 149
10.3.5 TIMERn_CAPDR: timer/counter n capture data register 150
10.3.6 TIMERn_PREDR: timer/counter n prescaler data register 150
10.3.7 TIMERn_CNT: timer/counter n counter register 150
10.3.8 TIMERn_OUTCR: timer/counter n output control register 151
10.3.9 TIMERn_DLY timer/counter n output delay data register 151
10.3.10 TIMERn_INTCR: timer/counter n interrupt control register 152
10.3.11 TIMERn_INTFLAG: timer/counter n interrupt flag register 153
10.3.12 TIMERn_ADTCR: timer/counter n ADC trigger control register 154
10.4 Functional description 155

10.4.1 Timer counter 40/41/42/43 155
10.4.2 Timer 40/41/42/43 Capture mode 156
10.4.3 Timer 40/41/42/43 Interval mode 157
10.4.3.1 Data reload time selection 158
10.4.3.2 Timer output delay 159
10.4.3.3 Output force level on the TnINP input 159
10.4.4 Back-to-back mode 162
10.4.5 One-shot interval mode 163
10.4.6 Timer counter sharing function 163
11 Timer counter 50 165
11.1 Timer counter 50 block diagram 166
11.2 Pin description for timer counter 50 167
11.3 Registers 168
11.3.1 TIMERn_CR: timer/counter n control register 169
11.3.2 TIMERn_ADR: timer/counter n A data register 171
11.3.3 TIMERn_BDR: timer/counter n B data register 171
11.3.4 TIMERn_CAPDR: timer/counter n capture data register 171
11.3.5 TIMERn_PREDR: timer/counter n prescaler data register 172
11.3.6 TIMERn_CNT: timer/counter n counter register 172
11.4 Functional description 173
11.4.1 Timer counter 50 173
11.4.2 16-bit Timer/counter mode 173
11.4.3 16-bit Capture mode 175
11.4.4 16-bit PPG mode 177
11.4.5 Counter clear input enable 179
12 Timer counter 60 180
12.1 Timer counter 60 block diagram 180
12.2 Registers 181
12.2.1 TIMER60_CR: timer/counter 60 control register 181
12.2.2 TIMER60_DR: timer/counter 60 data register 182
12.2.3 TIMER60_CNT: timer/counter 60 counter register 182
12.3 Functional description 183
12.3.1 Timing diagram 183
13 High speed 12-bit ADC 184
13.1 12-bit ADC block diagram 185
13.2 Pin description for 12-bit ADC 186
13.3 Registers 187
13.3.1 ADC_CR: A/D converter control register 188
13.3.2 ADC_OVSCR: A/D converter oversampling control register 189
13.3.3 ADC_IESR: A/D converter interrupt enable and status register 190
13.3.4 ADC_DR: A/D converter data register 191
13.3.5 ADC_PREDR: A/D converter prescaler data register 191
13.3.6 ADC_SAMR: A/D converter sampling time register 192
13.3.7 ADC_CHSELR: A/D converter channel selection register 192
13.4 Functional description 193
13.4.1 ADC enable/disable control 193
13.4.2 Channel selection 193
13.4.3 ADC conversion timing 194
13.4.4 ADC conversion mode 195
13.4.4.1 Single conversion mode 195

13.4.4.2 Sequential conversion mode 195
13.4.4.3 Continuous conversion mode 196
13.4.5 ADC oversampling 197
13.4.6 ADC recommend circuit 198
14 Comparator 0/1 199
14.1 Comparator 0/1 block diagram 200
14.2 Pin description for Comparator 0/1 201
14.3 Registers 202
14.3.1 CMPn_CR: comparator n control register 203
14.3.2 CMPn_SR: comparator n status register 204
14.3.3 CMPn_RCR: comparator n reference control register 204
15 USART 10 205
15.1 USART 10 block diagram 206
15.2 Pin description for USART 10 208
15.3 Registers 209
15.3.1 USARTn_CR1: USARTn control register 1 210
15.3.2 USARTn_CR2: USARTn control register 2 212
15.3.3 USARTn_CR3: USARTn control register 3 213
15.3.4 USARTn_ST: USARTn status register 215
15.3.5 USARTn_BDR: USARTn baud rate generation register 216
15.3.6 USARTn_RDR: USARTn receive data register 216
15.3.7 USARTn_TDR: USARTn transmit data register 216
15.3.8 USARTn_RTODR: USARTn receive time out data register 217
15.3.9 USARTn_RCDR: USARTn receive character detection data register 217
15.4 Functional description 218
15.4.1 USART clock generation 218
15.4.2 External clock (SCKn) 219
15.4.3 Synchronous mode operation 219
15.4.4 UART data format 220
15.4.5 UART parity bit 221
15.4.6 UART transmitter 222
15.4.6.1 UART sending TX data 222
15.4.6.2 UART transmitter flag and interrupt 222
15.4.6.3 UART parity generator 222
15.4.6.4 UART disabling transmitter 223
15.4.7 UART receiver 223
15.4.7.1 UART receiving RX data 223
15.4.7.2 UART receiver flag and interrupt 223
15.4.7.3 UART parity checker 224
15.4.7.4 UART disabling receiver 224
15.4.7.5 Asynchronous data reception 224
15.4.7.6 Receive time out function 226
15.4.7.7 UART auto baud rate detection 227
15.4.8 SPI mode 228
15.4.9 SPI clock formats and timing 228
15.4.10 Local interconnection network (LIN) mode 231
16 UART 0 233
16.1 UART 0 block diagram 234
16.2 Pin description for UART 0 235
16.3 Registers 236

16.3.1 UARTn_RBR: UARTn receive data buffer register 236
16.3.2 UARTn_THR: UARTn transmit data hold register 237
16.3.3 UARTn_IER: UARTn interrupt enable register 237
16.3.4 UARTn_IIR: UARTn interrupt ID register 238
16.3.5 UARTn_LCR: UARTn line control register 239
16.3.6 UARTn_DCR: UARTn data control register 240
16.3.7 UARTn_LSR: UARTn line status register 241
16.3.8 UARTn_BDR: UARTn baud rate divisor latch register 242
16.3.9 UARTn_BFR: UARTn baud rate fraction counter register 243
16.3.10 UARTn_IDTR: UARTn inter-frame delay time register 244
16.4 Functional description 245
16.4.1 Receiver sampling timing 245
16.4.2 Transmitter 246
16.4.3 Inter-frame delay transmission 246
16.4.4 Transmit interrupt 247
17 LPUART 0 248
17.1 LPUART block diagram 249
17.2 Pin description for LPUART 250
17.3 Registers 251
17.3.1 LPUARTn_CR1: LPUARTn control register 1 252
17.3.2 LPUARTn_CR2: LPUARTn control register 2 254
17.3.3 LPUARTn_IER: LPUARTn interrupt enable register 255
17.3.4 LPUARTn_IFSR: LPUARTn interrupt flag and status register 256
17.3.5 LPUARTn_RDR: LPUARTn receive data register 258
17.3.6 LPUARTn_TDR: LPUARTn transmit data register 258
17.3.7 LPUARTn_BDR: LPUARTn baud rate generation register 259
17.3.8 LPUARTn_BCMP: LPUARTn baud rate compensation register 259
17.3.9 LPUARTn_RTODR: LPUARTn receive time out data register 260
17.3.10 LPUARTn_RCDR: LPUARTn receive character detection data register 260
17.3.11 LPUARTn_DLYDR: LPUARTn Tx delay time data register 260
17.4 Functional description 261
17.4.1 LPUARTn clock generation 261
17.4.2 LPUARTn baud rate compensation 262
17.4.3 LPUARTn interface data format 264
17.4.4 LPUARTn interface parity bit 265
17.4.5 LPUARTn transmitter 265
17.4.5.1 LPUARTn sending TX data 265
17.4.5.2 LPUARTn parity generator 265
17.4.6 LPUARTn receiver 265
17.4.6.1 LPUARTn receiving RX data 266
17.4.6.2 LPUARTn parity checker 266
17.4.6.3 LPUARTn data reception 266
17.4.6.4 LPUARTn receive time out function 268
17.4.6.5 1-wire half-duplex communication 268
18 I2C 0 interface 269
18.1 I2C 0 block diagram 270
18.2 Pin description for I2C 0 271
18.3 Registers 272
18.3.1 I2Cn_CR: I2Cn control register 273
18.3.2 I2Cn_ST: I2Cn status register 274

18.3.3 I2Cn_SAR1: I2Cn slave address register 1 275
18.3.4 I2Cn_SAR2: I2Cn slave address register 2 275
18.3.5 I2Cn_DR: I2Cn data register 276
18.3.6 I2Cn_SDHR: I2Cn SDA hold time register 276
18.3.7 I2Cn_SCLR: I2Cn SCL low period register 277
18.3.8 I2Cn_SCHR: I2Cn SCL high period register 277
18.4 Functional description 278
18.4.1 I2C bit transfer 278
18.4.2 START/Repeated START/STOP 278
18.4.3 Data transfer 279
18.4.4 Acknowledge 279
18.4.5 Synchronization/arbitration 280
18.5 I2C operation 282
18.5.1 Master transmitter 282
18.5.2 Master receiver 284
18.5.3 Slave transmitter 286
18.5.4 Slave receiver 287
19 SPI 1 interface 288
19.1 SPI 1 block diagram 289
19.2 Pin description for SPI 1 290
19.3 Registers 291
19.3.1 SPIn_CR: SPIn control register 292
19.3.2 SPIn_SR: SPIn status register 293
19.3.3 SPIn_RDR: SPIn receive data register 293
19.3.4 SPIn_TDR: SPIn transmit data register 294
19.3.5 SPIn_PREDR: SPIn prescaler data register 294
19.4 Functional description 295
19.4.1 SPI clock formats and timing 295
20 Cyclic Redundancy Check (CRC) and checksum 297
20.1 CRC and checksum block diagram 298
20.2 Registers 299
20.2.1 CRC_CR: CRC control register 300
20.2.2 CRC_IN: CRC input data register 302
20.2.3 CRC_RLT: CRC result data register 302
20.2.4 CRC_INIT: CRC initial data register 303
20.2.5 CRC_SADR: CRC start address register 303
20.2.6 CRC_EADR: CRC end address register 304
20.3 Functional description 305
20.3.1 CRC polynomial structure 305
20.3.2 The CRC operation procedure in auto CRC/checksum mode 306
20.3.3 The CRC operation procedure in user CRC/checksum mode 306
21 Temperature Sensor (TS) 307
21.1 TS block diagram 307
21.2 Registers 308
21.2.1 TS_CR: Temperature Sensor control register 308
21.2.2 TS_IDR: Temperature Sensor interval data register 309
21.2.3 TS_ICNTR: Temperature Sensor interval counter register 309
21.2.4 TS_OUTDR: Temperature Sensor output data register 310
21.3 Functional description 311
21.3.1 Ring-oscillator of Temperature Sensor 311

21.3.2 Frequency counting ... 311
21.3.3 Temperature calculation ... 312
22 Electrical characteristics ... 313
22.1 Absolute maximum ratings ... 313
22.2 Recommended operating conditions ... 314
22.3 ADC characteristics ... 315
22.4 Power-on Reset characteristics ... 316
22.5 Comparator characteristics ... 316
22.6 Temperature Sensor characteristics ... 317
22.7 Low Voltage Reset/Indicator characteristics ... 318
22.8 High frequency internal RC oscillator characteristics ... 318
22.9 Internal Watchdog Timer RC oscillator characteristics ... 319
22.10 Timer 60 RC oscillator characteristics ... 319
22.11 DC electrical characteristics ... 320
22.12 Supply current characteristics ... 321
22.13 AC characteristics ... 325
22.14 SPI characteristics ... 326
22.15 I2C characteristics ... 327
22.16 UART timing characteristics ... 328
22.17 Data retention voltage in DEEP SLEEP mode 0 ... 329
22.18 Internal Flash memory characteristics ... 329
22.19 Input/output capacitance ... 329
22.20 Main oscillator characteristics ... 330
22.21 Sub-oscillator characteristics ... 331
22.22 Main oscillation stabilization time ... 332
22.23 Sub-oscillation stabilization time ... 333
22.24 Operating voltage range ... 333
22.25 Recommended circuit and layout ... 334
23 Package information ... 336
23.1 20 TSSOP package information ... 336
23.2 20 QFN package information ... 337
23.3 16 TSSOP package information ... 338
24 Ordering information ... 339
25 Development tools ... 340
25.1 Compiler ... 340
25.2 Debugger ... 341
25.3 Programmer ... 342
25.3.1 E-PGM+ ... 342
25.3.2 Gang programmer ... 342
25.4 SWD debug mode and E-PGM+ connection ... 343
Revision history ... 344

List of figures

Figure 1. Conceptual Block Diagram of A31L22x Series 1
Figure 2. A31L22x Series Block Diagram 19
Figure 3. TSSOP-20 Pinouts 23
Figure 4. QFN-20 Pinouts 24
Figure 5. TSSOP-16 Pinouts 25
Figure 6. Configuration Map for External Interrupt 0/1/2/3 Group (n = A, C, D, and E) 36
Figure 7. Main Memory Map 39
Figure 8. Connection Diagram of UART Boot 41
Figure 9. Internal Flash Memory Block Diagram 43
Figure 10. Configure Option Area Structure 50
Figure 11. SCU Block Diagram 58
Figure 12. Clock Source Configuration 59
Figure 13. Miscellaneous Clock Configuration 61
Figure 14. Clock Configuration Procedure 62
Figure 15. Power-up POR Sequence 64
Figure 16. Reset Configuration 65
Figure 17. LVR Reset Timing Diagram 66
Figure 18. Operating Mode 67
Figure 19. Reset Circuit Diagram 74
Figure 20. Wake-up Timer Block Diagram 77
Figure 21. Clock Monitoring Circuit Diagram 86
Figure 22. LVI Block Diagram 93
Figure 23. LVR Block Diagram 94
Figure 24. PMU Block Diagram 95
Figure 25. PCU Block Diagram 104
Figure 26. GPIO Block Diagram 104
Figure 27. I/O Port Block Diagram (General Purpose I/O Pins) 105
Figure 28. I/O Port Block Diagram (5V Tolerant I/O) 105
Figure 29. Port Structure Block Diagram 117
Figure 30. Debounce Function Timing Diagram 118
Figure 31. GPIO Block Diagram 118
Figure 32. WDT Block Diagram 119
Figure 33. WDT Interrupt and WDT Reset Timing Diagram 125
Figure 34. RTCC Block Diagram 127
Figure 35. Timer Counter n Block Diagram (n = 40, 41, 42, and 43) 144
Figure 36. 16-bit Capture Mode for Timer 40/41/42/43 156
Figure 37. Example of TnOUTA at 4MHz (n = 40, 41, 42 and 43) 158
Figure 38. Example of Changing the Period in Absolute Duty Cycle at 4MHz (n = 40, 41, 42 and 43) 158
Figure 39. Interval Mode Timing Chart With “DLYPOS = 0” (n = 40, 41, 42 and 43) 160
Figure 40. Interval Mode Timing Chart With “DLYPOS = 1” (n = 40, 41, 42 and 43) 161
Figure 41. Back-to-Back Mode Timing Chart with “DLYPOS = 0” (n = 40, 41, 42 and 43) 162
Figure 42. One-Shot Interval Timing Chart (n: 40, 41, 42 and 43) 163
Figure 43. Example of Timer Counter Sharing On Interval Mode (n: 40, 41 and 42) 164
Figure 44. Timer Counter n Block Diagram (n = 50) 166
Figure 45. 16-bit Timer/Counter Mode for Timer n (n = 50) 174
Figure 46. 16-bit Timer/Counter n Example (n = 50) 174
Figure 47. 16-bit Capture Mode for Timer n (n = 50) 175
Figure 48. 16-bit Capture Mode for Timer 50 176

Figure 49. Express Timer Overflow in Capture Mode 176
Figure 50. 16-bit PPG Repeat and One-shot Mode for Timer n (n = 50) 177
Figure 51. 16-bit PPG Mode Timing Chart for Timer n (n = 50) 178
Figure 52. Timing Chart When “Counter Clear Input Enable” (n = 50) 179
Figure 53. Timer Counter 60 Block Diagram 180
Figure 54. Timer/Counter 60 Timing Diagram 183
Figure 55. 12-bit ADC Block Diagram 185
Figure 56. ADC Enable/Disable Timing Chart 193
Figure 57. High Speed ADC Conversion Timing Chart 194
Figure 58. Example of Single Conversion Mode 195
Figure 59. Example of Sequential Conversion Mode 196
Figure 60. Example of Continuous Conversion Mode 196
Figure 61. Recommend Circuit for ADC Input 198
Figure 62. Comparator 0/1 Block Diagram 200
Figure 63. UART and LIN Block Diagram of USART (n = 10) 206
Figure 64. SPIn Block Diagram of USART (n = 10) 207
Figure 65. Clock Generation Block Diagram (USART, n = 10) 218
Figure 66. Synchronous Mode SCKn Timing (USART, n = 10) 220
Figure 67. Frame Format (UART) 221
Figure 68. Asynchronous Start Bit Sampling (n = 10) 224
Figure 69. Asynchronous Sampling of Data and Parity Bit (n = 10) 225
Figure 70. Stop Bit Sampling and Next Start Bit Sampling (n = 10) 226
Figure 71. Receive Time Out Function (n = 10) 226
Figure 72. Auto Baud Rate Detection Timing Diagram (n = 10) 227
Figure 73. USART SPIn Clock Formats when CPHAn=0 (n = 10) 229
Figure 74. USART SPIn Clock Formats when CPHAn=1 (n = 10) 230
Figure 75. LIN Break Field Detection and Transmit Timing Diagram (n = 10) 232
Figure 76. UART 0 Block Diagram 234
Figure 77. Data Inversion Control Diagram 240
Figure 78. Sampling Timing of UART Receiver 245
Figure 79. Transmission Data Format Example 246
Figure 80. Inter-frame Delay Timing Diagram 246
Figure 81. Transmit Interrupt Timing Diagram 247
Figure 82. LPUART Block Diagram (n = 0) 249
Figure 83. Frame Format 264
Figure 84. Start Bit Sampling 266
Figure 85. Sampling of Data and Parity Bit 267
Figure 86. Stop Bit Sampling and Next Start Bit Sampling 267
Figure 87. Receive Time Out Function 268
Figure 88. I2C Block Diagram (n = 0) 270
Figure 89. I2C Bus Bit Transfer (n = 0) 278
Figure 90. START and STOP Conditions (n = 0) 278
Figure 91. I2C Bus Data Transfer (n = 0) 279
Figure 92. I2C Bus Acknowledge (n = 0) 280
Figure 93. Clock Synchronization during Arbitration Procedure (n = 0) 281
Figure 94. Arbitration Procedure between Two Masters (n = 0) 281
Figure 95. SPI Block Diagram (n = 1) 289
Figure 96. SPIn Clock Formats when CPHAn=0 (n = 1) 295
Figure 97. SPIn Clock Formats when CPHAn=1 (n = 1) 296
Figure 98. CRC and Checksum Block Diagram 298

Figure 99. CRC Polynomial Structure 305
Figure 100. TS Block Diagram 307
Figure 101. Temperature Sensor Timing Diagram 311
Figure 102. IDD4 (SLEEP mode, fSUB = 32.768 kHz) at VDD = 3V 322
Figure 103. IDD4 (SLEEP mode, fWDTRC = 40 kHz) at VDD = 3V 322
Figure 104. IDD5 (DEEP SLEEP mode 0, RTCC/fSUB Off) at VDD = 3V 323
Figure 105. IDD5 (DEEP SLEEP mode 0, RTCC/fSUB On) at VDD = 3V 323
Figure 106. IDD7 (DEEP SLEEP mode 2) at VDD = 3V 324
Figure 107. AC Timing 325
Figure 108. SPI Timing 326
Figure 109. I2C Timing 327
Figure 110. UART Timing Characteristics 328
Figure 111. Timing Waveform of UART Module 328
Figure 112. Crystal/Ceramic Oscillator 330
Figure 113. External Clock 330
Figure 114. Crystal Oscillator 331
Figure 115. Clock Timing Measurement at XIN 332
Figure 116. Operating Voltage Range 333
Figure 117. Recommended Circuit and Layout 334
Figure 118. Recommended Circuit and Layout with SMPS Power 335
Figure 119. 20 TSSOP Package Outline 336
Figure 120. 20 QFN Package Outline 337
Figure 121. 16 TSSOP Package Outline 338
Figure 122. A31L22x Series Numbering Nomenclature 339
Figure 123. A-Link and Pin Descriptions 341
Figure 124. E-PGM+ (Single Writer) and Pin Descriptions 342
Figure 125. E-Gang4 and E-Gang6 (for Mass Production) 342
Figure 126. Connection between A31L22x Series and E-PGM+ using SWD Debugger Interface 343

List of tables

Table 1. A31L22x Series Features and Peripheral Counts 18
Table 2. Pin Description 26
Table 3. Interrupt Vector Map 30
Table 4. Base Address of Interrupt Registers 33
Table 5. Interrupt Controller Register Map 33
Table 6. Corresponding Interrupts of IMSKx 38
Table 7. Boot Mode Pin List 41
Table 8. Internal Flash Memory Specification 42
Table 9. Base Address of Flash Memory Controller 44
Table 10. Flash Memory Controller Register Map 44
Table 11. Configuration Option Area Map 51
Table 12. Clock Sources 60
Table 13. Pins and External Signals for SCU 68
Table 14. Base Address of SCU (Chip Configuration) 69
Table 15. SCU Register Map (Chip Configuration) 69
Table 16. Base Address of SCU (Clock Generation) 70
Table 17. SCU Register Map (Clock Generation) 70
Table 18. Base Address of SCU (LVR/LVI) 70
Table 19. SCU Register Map (LVR/LVI) 70
Table 20. Functional Table on Current Mode 96
Table 21. Wake-up Time Table 97
Table 22. Base Address of PMU 98
Table 23. PMU Register Map 98
Table 24. GPIO Alternative Functions 106
Table 25. Base Address of Port 107
Table 26. PCU and GPIO Register Map 107
Table 27. Functions of PA Port 109
Table 28. Functions of PC Port 110
Table 29. Functions of PD Port 111
Table 30. Functions of PE Port 112
Table 31. Base Address of WDT 120
Table 32. WDT Register Map 120
Table 33. Pre-scaled WDT Counter Clock Frequency 126
Table 34. Base Address of RTCC 128
Table 35. RTCC Register Map 128
Table 36. Value of RTC_HOUR/RTC_ALHOUR by HS24 bit 134
Table 37. Correctable Range of Time Error 140
Table 38. Pins and External Signals for Timer Counter n (n = 40, 41, 42, and 43) 145
Table 39. Base Address of Timer 40/41/42/43 146
Table 40. Timer Register Map (n = 40, 41, 42, and 43) 146
Table 41. Timer n Operating Modes (n = 40, 41, 42, and 43) 155
Table 42. TnOUTA/B Channel Polarity 157
Table 43. Example of Timer Counter Sharing On Interval Mode 164
Table 44. Pins and External Signals for Timer Counter 50 (n = 50) 167
Table 45. Base Address of Timer 50 168
Table 46. Timer Register Map (n = 50) 168
Table 47. Timer n Operating Modes (n = 50) 173
Table 48. Base Address of Timer 60 181
Table 49. Timer 60 Register Map 181

Table 50. Pins and External Signals for 12-bit ADC 186
Table 51. Base Address of ADC 187
Table 52. High Speed ADC Register Map 187
Table 53. ADC Frequency Set according to VDD 194
Table 54. ADC Result Data 197
Table 55. Pins and External Signals for Comparator 0/1 201
Table 56. Base Address of Comparator 0/1 202
Table 57. Comparator n Register Map (n = 0 and 1) 202
Table 58. Pins and External Signals for USART 10 (n = 10) 208
Table 59. Base Address of USART 10 209
Table 60. USART n Register Map (n = 10) 209
Table 61. Equations for Calculating USART Baud Rate Register Settings (n = 10) 219
Table 62. CPOL Functionality (n = 10) 228
Table 63. Pins and External Signals for UART 0 (n = 0) 235
Table 64. Base Address of UART 236
Table 65. UART n Register Map (n = 0) 236
Table 66. Interrupt ID and Control of UARTn_IIR 238
Table 67. Interrupt ID and UARTn_LCR's Control 239
Table 68. Example of Baud Rate Calculation (without BFR) 242
Table 69. Example of Baud Rate Calculation 243
Table 70. Pins and External Signals for LPUART (n = 0) 250
Table 71. Base Address of LPUART 251
Table 72. LPUART Register Map (n = 0) 251
Table 73. Equations for Calculating Baud Rate Register Settings 261
Table 74. Baud Rate Compensation Example 1 262
Table 75. Baud Rate Compensation Example 2 263
Table 76. Pins and External Signals for I2C (n = 0) 271
Table 77. Base Address of I2C Interface 272
Table 78. I2C Register Map (n = 0) 272
Table 79. Pins and External Signals for SPI (n = 1) 290
Table 80. Base Address of SPI Interface 291
Table 81. SPI Register Map (n = 1) 291
Table 82. CPOL Functionality (n = 1) 295
Table 83. Base Address of CRC 299
Table 84. CRC Register Map 299
Table 85. Base Address of TS 308
Table 86. TS Register Map 308
Table 87. TS Output Frequency Registers in Configure Option Page 0 312
Table 88. Absolute Maximum Ratings 313
Table 89. Recommended Operating Conditions 314
Table 90. ADC Characteristics 315
Table 91. Power-on Reset Characteristics 316
Table 92. Comparator Characteristics 316
Table 93. Temperature Sensor Characteristics 317
Table 94. Low Voltage Reset/Indicator Characteristics 318
Table 95. High Frequency Internal RC Oscillator Characteristics 318
Table 96. Internal Watchdog Timer RC Oscillator Characteristics 319
Table 97. Timer 60 RC Oscillator Characteristics 319
Table 98. DC Electrical Characteristics 320
Table 99. Supply Current Characteristics 321

Table 100. AC Characteristics 325
Table 101. SPI Characteristics 326
Table 102. I2C Characteristics 327
Table 103. UART Timing Characteristics (PCLK=32MHz) 328
Table 104. Data Retention Voltage in DEEP SLEEP mode 0 329
Table 105. Internal Flash Memory Characteristics 329
Table 106. Input/Output Capacitance 329
Table 107. Main Oscillator Characteristics 330
Table 108. Sub-oscillator Characteristics 331
Table 109. Main Oscillation Stabilization Time 332
Table 110. Sub-oscillation Stabilization Time 333
Table 111. A31L22x Series Ordering Information 339

1 Description

The ultra-low power A31L22x series is a microcontroller based on ARM Cortex-M0+ core with a Flash memory of up to 32KB, and an SRAM of 4KB. Operation voltage of the device ranges from 1.71V to 3.6V. It provides a highly flexible and cost-effective solution for many embedded control applications.

This device offers 16-bit timers, Real timer and calendar, 12-bit ADC, Comparator, CRC generator, UART, USART, LPUART, I2C, SPI, etc. The A31L22x series also has a POR, LVR, LVI, and an internal RC oscillator.

The ultra-low power A31L22x series supports SLEEP mode and DEEP SLEEP mode to reduce power consumption. The A31L22x series is suitable for ultra-low power applications.

1.1 Device overview

Table 1. A31L22x Series Features and Peripheral Counts

Peripheral	Description
CPU	Cortex-M0+
Memory	• Flash memory: 32/16 Kbytes • SRAM: 4 Kbytes, 32-byte backup register
I/O	17 programmable
Timers	• Watchdog Timer, Real Time Clock and Calendar • Four general purpose timers and one low power timer — Periodic, one-shot, PWM, capture mode
ADC	8-channel input, 12-bit ADC with 0.5Msps, down to 1.71V
Comparator	Two comparators, down to 1.71V
Temperature sensor	Frequency variation: 3.2 kHz/℃
CRC generator	8/16/32-bit CRC generator, CRC-8/16/32, CRC-CCITT
External communication ports	• 1 USART (UART + SPI), 1 UART • 1 LPUART, up to 9600bps with 32.768kHz • 1 I^2C up to 1Mbps, 1 SPI up to 16Mbps
128-bit Unique ID	Supported
System fail-safe function	Clock monitoring
Debug interface	SWD debug interface
Ultra-low power tech	• 1.71V to 3.6V supply voltage • 78uA/MHz in RUN mode, 10uA in RUN mode (32.768kHz, 40kHz) • 0.99uA DEEP SLEEP + RTCC + SRAM retention • 0.3uA DEEP SLEEP with power control • 36nA shutdown (DEEP SLEEP mode 3) • 5us wakeup time from all power modes
Packages	• TSSOP 20 (0.65mm pitch) • QFN 20 (0.5mm pitch) • TSSOP 16 (0.65mm pitch)
Operating temperature	-40℃ to +85℃ (commercial grade)
	-40℃ to +105℃ (industrial grade)

1.2 Block diagram

Figure 2 shows a block diagram of the A31L22x series.

Figure 2. A31L22x Series Block Diagram

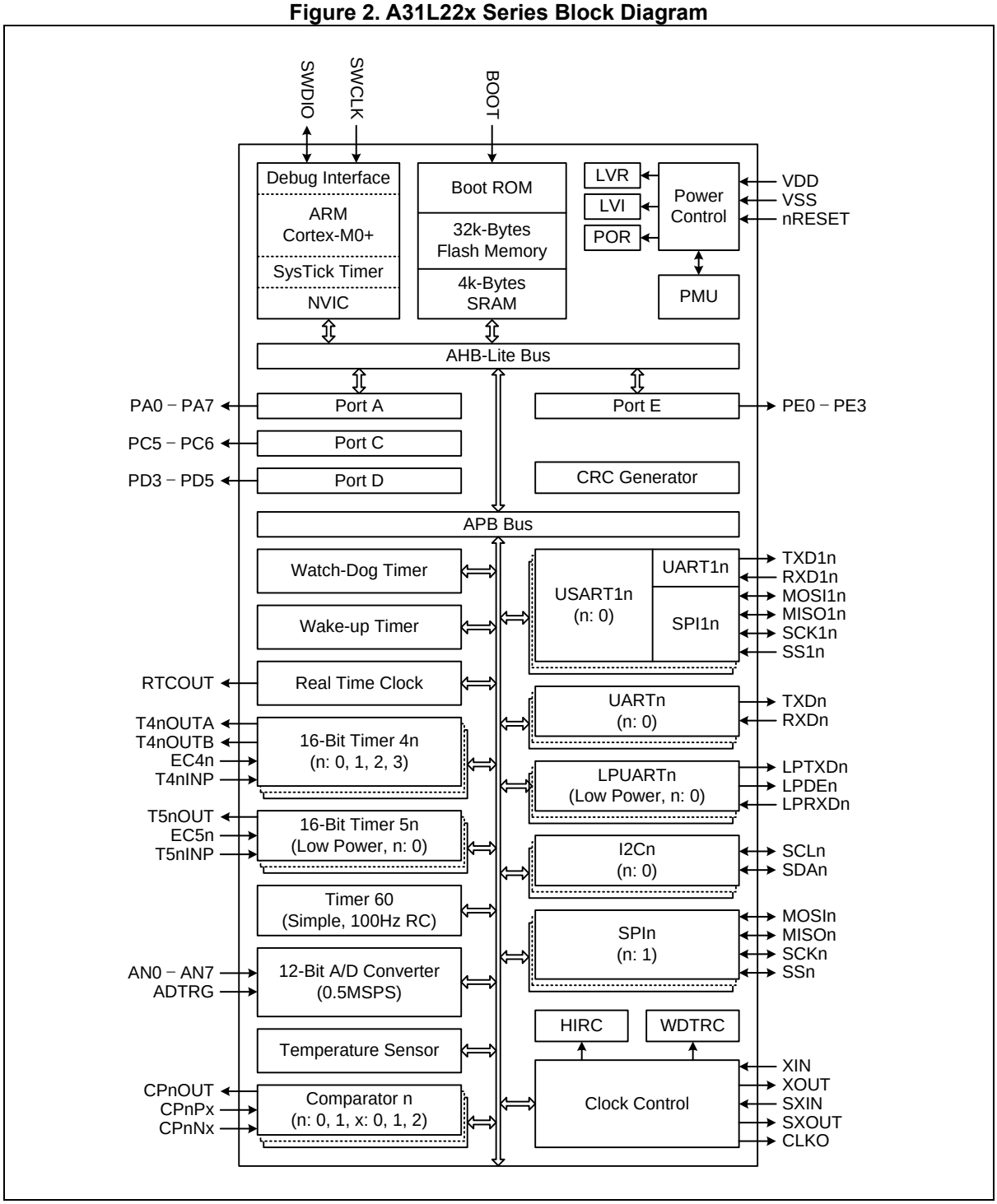

1.3 Functional description

The following sections provide a brief description of the features of the A31L22x series microcontroller.

1.3.1 ARM Cortex-M0+

The Cortex-M0+ processor has a very low gate count. It is a highly energy efficient processor for microcontrollers and deeply embedded applications that require an area-optimized, low-power processor.

In the core, the system timer (SYSTICK) provides a simple 24-bit timer that can be used as a real time operating system (RTOS) or as a simple counter.

The processor implements the ARMv6-M Thumb instruction set including a number of 32-bit instructions, which are introduced with Thumb-2 technology. Hardware single-cycle multiplication is available.

Integrated Nested Vectored Interrupt Controller (NVIC) provides deterministic interrupt handling.

It also supports SWD debugging features.

1.3.2 Nested Vector Interrupt Controller (NVIC)

External interrupt signals connect to the NVIC, and the NVIC prioritizes the interrupts. Software can set the priority of each interrupt.

The NVIC embedded in the Cortex-M0+ processor core achieves low latency interrupts processing and efficient processing of late arriving interrupts.

All NVIC registers can only be accessed through word transfers.

1.3.3 32KB internal Code Flash memory

The A31L22x series has built-in 32KB Flash memory.

It supports self-programming feature. In addition, ISP and JTAG programming in boot or debug mode are supported.

1.3.4 4KB internal SRAM

On-chip 4KB SRAM is used as a working memory space and as a program code area temporarily.

1.3.5 Boot logic

A boot logic supports Flash programming. The boot logic is activated when the external boot pin is set to boot mode.

1.3.6 System Control Unit (SCU)

An SCU block manages internal power, clock, reset and operation mode. It also controls the analog blocks (Oscillator Block, VDC and LVR).

1.3.7 Power Management Unit (PMU)

A PMU block manages power of internal core, Code Flash, SRAM, logic, and peripheral blocks in RUN, SLEEP, and DEEP SLEEP modes.

It also controls the wake-up time from SLEEP and DEEP SLEEP modes.

1.3.8 24-bit Watchdog Timer (WDT)

A Watchdog Timer monitors the system. It generates internal resets or interrupts to detect abnormal status of the system.

1.3.9 Multi-purpose 16-bit timer

Four-channel 16-bit timers and one-channel low power general-purposed 16-bit timer support the functions introduced below:

- Periodic timer mode
- Counter mode
- PWM mode
- Capture mode

1.3.10 Real Time Clock and Calendar (RTCC)

A real time clock and a calendar can run in SLEEP and DEEP SLEEP modes. The RTCC is not reset by a system reset except in the event of a power-on reset.

1.3.11 USART (UART and SPI)

USART supports UART and SPI modes. The A31L22x series has 1 channel USART module.

Boot mode uses this USART10 block to download Flash program.

1.3.12 Inter-integrated Circuit (I2C) interface

The A31L22x series has one channel of I2C block and supports up to 1MHz I2C communication.

Master and slave modes are available.

1.3.13 Serial Peripheral Interface (SPI)

The A31L22x series has one channel of SPI block and supports up to 16MHz communication.

Master and slave modes are available.

1.3.14 Universal Asynchronous Receiver/Transmitter (UART)

The A31L22x series has one channel of UART block.

For accurate baud rate control, a fractional baud-rate generation feature is supported.

1.3.15 Low Power Universal Asynchronous Receiver/Transmitter (LPUART)

The A31L22x series has one channel of Low Power UART block. This LPUART is available at 32.768kHz sub oscillator with up to 9600bps.

1.3.16 General PORT I/Os (GPIO)

8-bit PA port, 2-bit PC port, 3-bit PD port, and 4-bit PE port are available and provide multiple functions.

- General I/O port
- External interrupt input port and on-chip input debounce filter
- Programmable pull-up, pull-down, and open-drain selection

1.3.17 12-bit Analog-to-Digital Converter (ADC)

ADC of the A31L22x series can convert analog signals to digital signals at a conversion rate of up to 0.5Msps. 12-channel analog MUX provides various combinations of data from external and internal analog signals.

1.3.18 Comparator

The A31L22x series has two comparator blocks. The block has an internal reference for channels.

1.3.19 Cyclic Redundancy Check (CRC) generator

The A31L22x series has four polynomials for the CRC generator: CRC-CCITT, CRC-8/-16/-32.

1.3.20 Temperature Sensor (TS)

The Temperature Sensor consists of a ring-oscillator. Its frequency varies with temperature.

2 Pinouts and pin descriptions

In chapter 2, pinouts and pin descriptions of the A31L22x series are introduced.

2.1 Pinouts

Figure 3. TSSOP-20 Pinouts

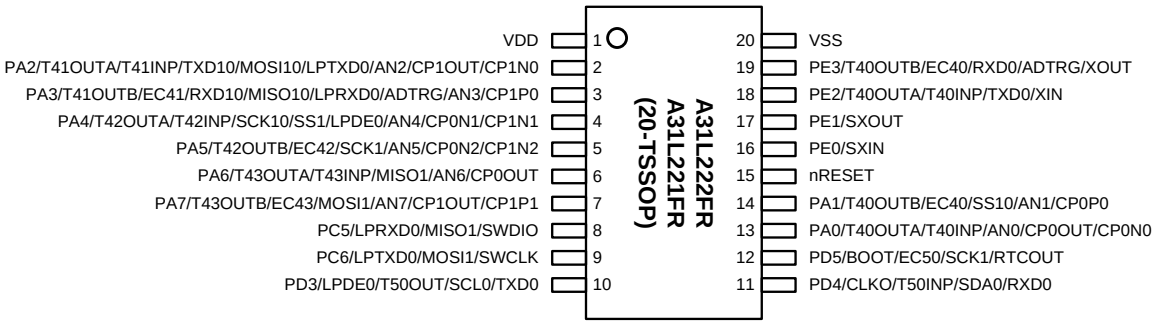

NOTES:

1. PD[4:3] pins are 5V tolerant I/O. The corresponding internal resistor must be disabled by s/w to use as 5V I/O. To use as 5V tolerant output, an external pull-up resistor must be used by application and the corresponding pins must be configured with open-drain output by s/w.
2. The PA0 and PA2 pins may be a wakeup source from deep sleep with ALLPWR = 2/3.

Figure 4. QFN-20 Pinouts

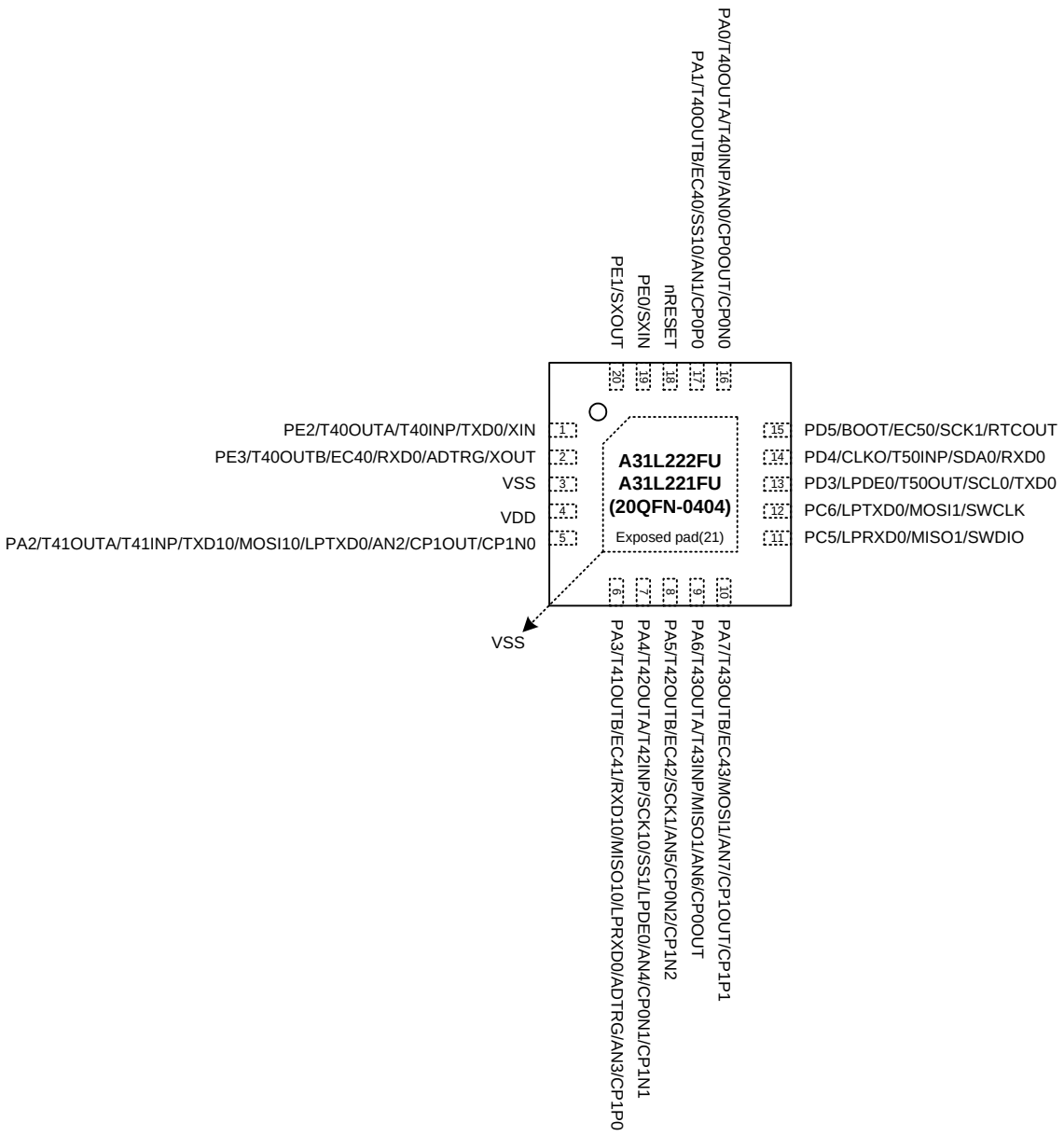

NOTES:

1. PD[4:3] pins are 5V tolerant I/O. The corresponding internal resistor must be disabled by s/w to use as 5V I/O. To use as 5V tolerant output, an external pull-up resistor must be used by application and the corresponding pins must be configured with open-drain output by s/w.
2. The PA0 and PA2 pins may be a wakeup source from deep sleep with ALLPWR = 2/3.

Figure 5. TSSOP-16 Pinouts

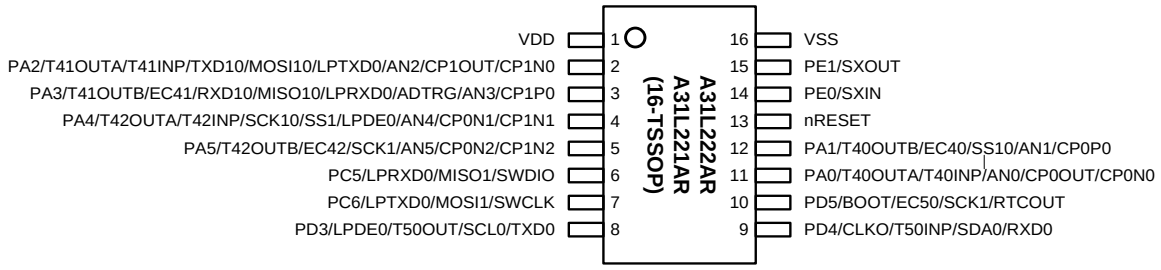

NOTES:

1. The PA[7:6] and PE[3:2] pins should be selected as a push-pull output or an input with pullup or pull-down resistor by software control when the 16TSSOP package is used.
2. PD[4:3] pins are 5V tolerant I/O. The corresponding internal resistor must be disabled by s/w to use as 5V I/O. To use as 5V tolerant output, an external pull-up resistor must be used by application and the corresponding pins must be configured with open-drain output by s/w.
3. The PA0 and PA2 pins may be a wakeup source from deep sleep with ALLPWR = 2/3.

2.2 Pin description

Table 2 shows pin configuration containing several pairs of power/ground and other dedicated pins. Multi-function pins have up to nine selections of functions including GPIO.

Table 2. Pin Description

Pin number			Pin name	Type	Description	Remark
TSSOP-20	QFN-20	TSSOP-16				
1	4	1	VDD	P	VDD	
2	5	2	PA2*	IOUDS	PORT A Bit 2 Input/Output	Wake-up possible from deep sleep with ALLPWR=2/3
			T41OUTA	O	Timer 41 pulse output	
			T41INP	I	Timer 41 capture/force input	
			TXD10	O	UART data output	
			MOSI10	I/O	SPI master output, slave input	
			LPTXD0	O	Low power UART data output	
			AN2	IA	A/D converter analog input channel	
			CP1OUT	OA	Comparator 1 output	
			CP1N0	IA	Comparator 1 negative input	
3	6	3	PA3*	IOUDS	PORT A Bit 3 Input/Output	
			T41OUTB	O	Timer 41 pulse output	
			EC41	I	Timer 41 event count input	
			RXD10	I	UART data input	
			MISO10	I/O	SPI master input, slave output	
			LPRXD0	I	Low power UART data input	
			ADTRG	I	ADC trigger input	
			AN3	IA	A/D converter analog input channel	
			CP1P0	IA	Comparator 1 positive input	
4	7	4	PA4*	IOUDS	PORT A Bit 4 Input/Output	
			T42OUTA	O	Timer 42 pulse output	
			T42INP	I	Timer 42 capture/force input	
			SCK10	I/O	SPI clock input/output	
			SS1	I	SPI slave select input	
			LPDE0	O	Low power UART DE signal output	
			AN4	IA	A/D converter analog input channel	
			CP0N1	IA	Comparator 0 negative input	
			CP1N1	IA	Comparator 1 negative input	
5	8	5	PA5*	IOUDS	PORT A Bit 5 Input/Output	
			T42OUTB	O	Timer 42 pulse output	
			EC42	I	Timer 42 event count input	
			SCK1	I/O	SPI clock input/output	
			AN5	IA	A/D converter analog input channel	
			CP0N2	IA	Comparator 0 negative input	
			CP1N2	IA	Comparator 1 negative input	

Table 2. Pin Description (continued)

Pin number			Pin name	Type	Description	Remark
TSSOP-20	QFN-20	TSSOP-16				
6	9	-	PA6*	IOUDS	PORT A Bit 6 Input/Output	
			T43OUTA	O	Timer 43 pulse output	
			T43INP	I	Timer 43 capture/force input	
			MISO1	I/O	SPI master input, slave output	
			AN6	IA	A/D converter analog input channel	
			CP0OUT	OA	Comparator 0 output	
7	10	-	PA7*	IOUDS	PORT A Bit 7 Input/Output	
			T43OUTB	O	Timer 43 pulse output	
			EC43	I	Timer 43 event count input	
			MOSI1	I/O	SPI master output, slave input	
			AN7	IA	A/D converter analog input channel	
			CP1OUT	OA	Comparator 1 output	
			CP1P1	IA	Comparator 1 positive input	
8	11	6	PC5	IOUDS	PORT C Bit 5 Input/Output	
			LPRXD0	Input	Low power UART data input	
			MISO1	I/O	SPI master input, slave output	
			SWDIO*	I/O	SWD data input/output	Pull-up when reset
9	12	7	PC6	IOUDS	PORT C Bit 6 Input/Output	
			LPTXD0	Output	Low power UART data output	
			MOSI1	I/O	SPI master output, slave input	
			SWCLK*	Input	SWD clock input	Pull-down when reset
10	13	8	PD3*	IOUDS	PORT D Bit 3 Input/Output	5V tolerant I/O (The internal pull-up resistor must be disabled to use 5V I/O)
			LPDE0	O	Low power UART DE signal output	
			T50OUT	O	Timer 50 pulse output	
			SCL0	I/O	I2C clock input/output	
			TXD0	O	UART data output	
11	14	9	PD4*	IOUDS	PORT D Bit 4 Input/Output	5V tolerant I/O (The internal pull-up resistor must be disabled to use 5V I/O)
			CLKO	O	System clock output	
			T50INP	I	Timer 50 capture/clear input	
			SDA0	I/O	I2C data input/output	
			RXD0	I	UART data input	
12	15	10	PD5	IOUDS	PORT D Bit 5 Input/Output	
			BOOT*	I	Boot mode input	Pull-up when reset
			EC50	I	Timer 50 event count input	
			SCK1	I/O	SPI clock input/output	
			RTCOUT	O	Real time clock output	

Table 2. Pin Description (continued)

Pin number			Pin name	Type	Description	Remark
TSSOP-20	QFN-20	TSSOP-16				
13	16	11	PA0*	IOUDS	PORT A Bit 0 Input/Output	Wake-up possible from deep sleep with ALLPWR=2/3
			T40OUTA	O	Timer 40 pulse output	
			T40INP	I	Timer 40 capture/force input	
			AN0	IA	A/D converter analog input channel	
			CP0OUT	OA	Comparator 0 output	
			CP0N0	IA	Comparator 0 negative input	
14	17	12	PA1*	IOUDS	PORT A Bit 1 Input/Output	
			T40OUTB	O	Timer 40 pulse output	
			EC40	I	Timer 40 event count input	
			SS10	I	SPI slave select input	
			AN1	IA	A/D converter analog input channel	
			CP0P0	IA	Comparator 0 positive input	
15	18	13	nRESET	Input	External Reset Input	Always pull-up
16	19	14	PE0*	IOUDS	PORT E Bit 0 Input/Output	
			SXIN	IA	Sub Oscillator Input	
17	20	15	PE1*	IOUDS	PORT E Bit 1 Input/Output	
			SXOUT	OA	Sub Oscillator Output	
18	1	-	PE2*	IOUDS	PORT E Bit 2 Input/Output	
			T40OUTA	O	Timer 40 pulse output	
			T40INP	I	Timer 40 capture/force input	
			TXD0	O	UART data output	
			XIN	IA	Main oscillator input	
19	2	-	PE3*	IOUDS	PORT E Bit 3 Input/Output	
			T40OUTB	O	Timer 40 pulse output	
			EC40	I	Timer 40 event count input	
			RXD0	I	UART data input	
			ADTRG	I	ADC trigger input	
			XOUT	OA	Main oscillator output	
20	3	16	VSS	P	Ground	
-	21	-	VSS	P	Ground (Exposed pad)	

NOTES:

1. Notation: I=Input, O=Output, U=Pull-up, D=Pull-down, S=Schmitt-Trigger Input Type, C=CMOS Input Type, A=Analog, P=Power
2. (*) Selected pin function after reset condition
3. Pin order may be changed with revision notice.

3 Central Processing Unit (CPU)

The A31L22x series uses Cortex® –M0+ as its CPU and includes an interrupt controller named NVIC.

3.1 Cortex®–M0+ core

The Cortex-M0+ processor is the most energy-efficient ARM processor available. It builds on the very successful Cortex-M0+ processor, retaining full instruction set and tool compatibility, while further reducing energy consumption and increasing performance.

Please refer to the technical reference manual “ARM DDI 0484C” provided by ARM for detail information of Cortex-M0+.

3.2 Interrupt controller

The Cortex-M0+ processor has an embedded interrupt controller named Nested Vector Interrupt Controller (NVIC). The A31L22x series has an additional interrupt control block for controlling 32 interrupt sources generated by internal peripherals.

To use interrupts from internal peripherals, both the NVIC and the interrupt control block must be configured properly.

This document only describes the peripheral interrupt controller, therefore for more information on NVIC inside the Cortex-M0+ processor, please refer to the technical reference manual “ARM DDI 0484C” on the ARM technical document site.

Table 3. Interrupt Vector Map

Priority	Vector Address	Interrupt Source
-16	0x0000_0000	Stack Pointer
-15	0x0000_0004	Reset Address
-14	0x0000_0008	NMI Exception
-13	0x0000_000C	Hard Fault Exception
-12	0x0000_0010	Reserved
-11	0x0000_0014	
-10	0x0000_0018	
-9	0x0000_001C	
-8	0x0000_0020	
-7	0x0000_0024	
-6	0x0000_0028	

Table 3. Interrupt Vector Map (continued)

Priority	Vector Address	Interrupt Source
-5	0x0000_002C	SVCall Exception
-4	0x0000_0030	Reserved
-3	0x0000_0034	
-2	0x0000_0038	PenSV Exception
-1	0x0000_003C	SysTick Exception
0	0x0000_0040	LVI Interrupt
1	0x0000_0044	WUT Interrupt
2	0x0000_0048	WDT Interrupt
3	0x0000_004C	EINT0 Interrupt
4	0x0000_0050	EINT1 Interrupt
5	0x0000_0054	EINT2 Interrupt
6	0x0000_0058	EINT3 Interrupt
7	0x0000_005C	TIMER40 Interrupt
8	0x0000_0060	TIMER41 Interrupt
9	0x0000_0064	TIMER42 Interrupt
10	0x0000_0068	I2C0 Interrupt
11	0x0000_006C	USART10 Interrupt
12	0x0000_0070	SPI1 Interrupt
13	0x0000_0074	Reserved
14	0x0000_0078	
15	0x0000_007C	TIMER50 Interrupt
16	0x0000_0080	Reserved
17	0x0000_0084	
18	0x0000_0088	ADC Interrupt
19	0x0000_008C	UART0 Interrupt
20	0x0000_0090	Temperature Sensor Interrupt

Table 3. Interrupt Vector Map (continued)

Priority	Vector Address	Interrupt Source
21	0x0000_0094	TIMER43 Interrupt
22	0x0000_0098	CMP[1:0] Interrupt
23	0x0000_009C	Reserved
24	0x0000_00A0	
25	0x0000_00A4	LPUART0 Interrupt
26	0x0000_00A8	Reserved
27	0x0000_00AC	
28	0x0000_00B0	RTCC Interrupt TIMER60 Interrupt
29	0x0000_00B4	Reserved
30	0x0000_00B8	
31	0x0000_00BC	

3.3 Registers

Base address and register map of the interrupt registers are shown in Table 4 and Table 5.

Table 4. Base Address of Interrupt Registers

Name	Base address
Interrupt register	0x4000_1000

Table 5. Interrupt Controller Register Map

Name	Offset	Type	Description	Reset Value
INTC_PnTRIG	0x0000-0x00FF	RW	Port n Interrupt Trigger Selection Register	0000_0000
INTC_PnCR	0x0100-0x01FF	RW	Port n Interrupt Control Register	0000_0000
INTC_PnFLAG	0x0200-0x02FF	RW	Port n Interrupt Flag Register	0000_0000
INTC_EINTxCONF1	0x0300-0x03FF	RW	External Interrupt Configuration Register1	0000_0000
INTC_MSK	0x0400	RW	Interrupt Source Mask Register	0000_0000

NOTES:

1. n = A, C, D, and E
2. x = 0 to 3

3.3.1 INTC_PnTRIG: port n interrupt trigger selection register

INTC_PnTRIG register is 32-bit size and accessible in 32/16/8-bit (n= A, C, D, and E).

INTC_PATRIG =0x4000_1000, INTC_PCTRIG =0x4000_1008
INTC_PDTRIG =0x4000_100C, INTC_PETRIG =0x4000_1010

31	30	29	28	27	26	25	24	23	22	21	20	19	18	17	16	15	14	13	12	11	10	9	8	7	6	5	4	3	2	1	0
Reserved																								ITRIG7	ITRIG6	ITRIG5	ITRIG4	ITRIG3	ITRIG2	ITRIG1	ITRIG0
0x000000																								0	0	0	0	0	0	0	0
–																								RW	RW	RW	RW	RW	RW	RW	RW

x ITRIGx	Port n Interrupt Trigger Selection bit, x= 0 to 7	
	0	Edge trigger interrupt
	1	Level trigger interrupt

3.3.2 INTC_PnCR: port n interrupt control register

INTC_PnCR register is 32-bit size and accessible in 32/16/8-bit (n= A, C, D, and E).

INTC_PACR=0x4000_1100, INTC_PCCR=0x4000_1108
INTC_PDCR=0x4000_110C, INTC_PECR=0x4000_1110

31 30 29 28 27 26 25 24	23 22 21 20 19 18 17 16	15 14	13 12	11 10	9 8	7 6	5 4	3 2	1 0
Reserved		INTCTL7	INTCTL6	INTCTL5	INTCTL4	INTCTL3	INTCTL2	INTCTL1	INTCTL0
0x0000		0 0	0 0	0 0	0 0	0 0	0 0	0 0	0 0
–		RW	RW	RW	RW	RW	RW	RW	RW

2x+1 2x	INTCTLx	Port n Interrupt Control bits, x= 0 to 7	
		00	Disable external interrupt (The flag bit won't be set)
		01	Interrupt on falling edge or on low level
		10	Interrupt on rising edge or on high level
		11	Interrupt on both falling and rising edge, No level interrupt

NOTE: Do not write "11" to the corresponding INTCTLx[1:0] bits when the ITRIGx bit of INTC_PnTRIG is '1'. If so, it may cause a malfunction.

3.3.3 INTC_PnFLAG: port n interrupt flag register

INTC_PnFLAG register is 32-bit size and accessible in 32/16/8-bit (n= A, C, D, and E).

INTC_PAFLAG=0x4000_1200, INTC_PCFLAG=0x4000_1208
INTC_PDFLAG=0x4000_120C, INTC_PEFLAG=0x4000_1210

31 30 29 28 27 26 25 24	23 22 21 20 19 18 17 16	15 14 13 12 11 10 9 8	7	6	5	4	3	2	1	0
Reserved			FLAG7	FLAG6	FLAG5	FLAG4	FLAG3	FLAG2	FLAG1	FLAG0
0x000000			0	0	0	0	0	0	0	0
–			RW	RW	RW	RW	RW	RW	RW	RW

x	FLAGx	Port n Interrupt Flag bit, x: 0 to 7	
		0	No request occurred
		1	Request occurred. The bit is cleared to '0' when '1' is written.

3.3.4 INTC_EINTnCONF1: external interrupt n configuration register 1 (n= 0 to 3)

INTC_EINTnCONF1 register is 32-bit size and accessible in 32/16/8-bit.

INTC_EINT0CONF1=0x4000_1300, INTC_EINT1CONF1=0x4000_1304
INTC_EINT2CONF1=0x4000_1308, INTC_EINT3CONF1=0x4000_130C

31 30 29 28	27 26 25 24	23 22 21 20	19 18 17 16	15 14 13 12	11 10 9 8	7 6 5 4	3 2 1 0
CONF7	CONF6	CONF5	CONF4	CONF3	CONF2	CONF1	CONF0
0 0 0 0	0 0 0 0	0 0 0 0	0 0 0 0	0 0 0 0	0 0 0 0	0 0 0 0	0 0 0 0
RW	RW	RW	RW	RW	RW	RW	RW

4x+3	CONFx	Configuration bits for External Interrupt Group n, x: 0 to 7	
4x		0000	PAx
		0010	PCx
		0011	PDx
		0100	PEx
		Others	Reserved

Figure 6. Configuration Map for External Interrupt 0/1/2/3 Group (n = A, C, D, and E)

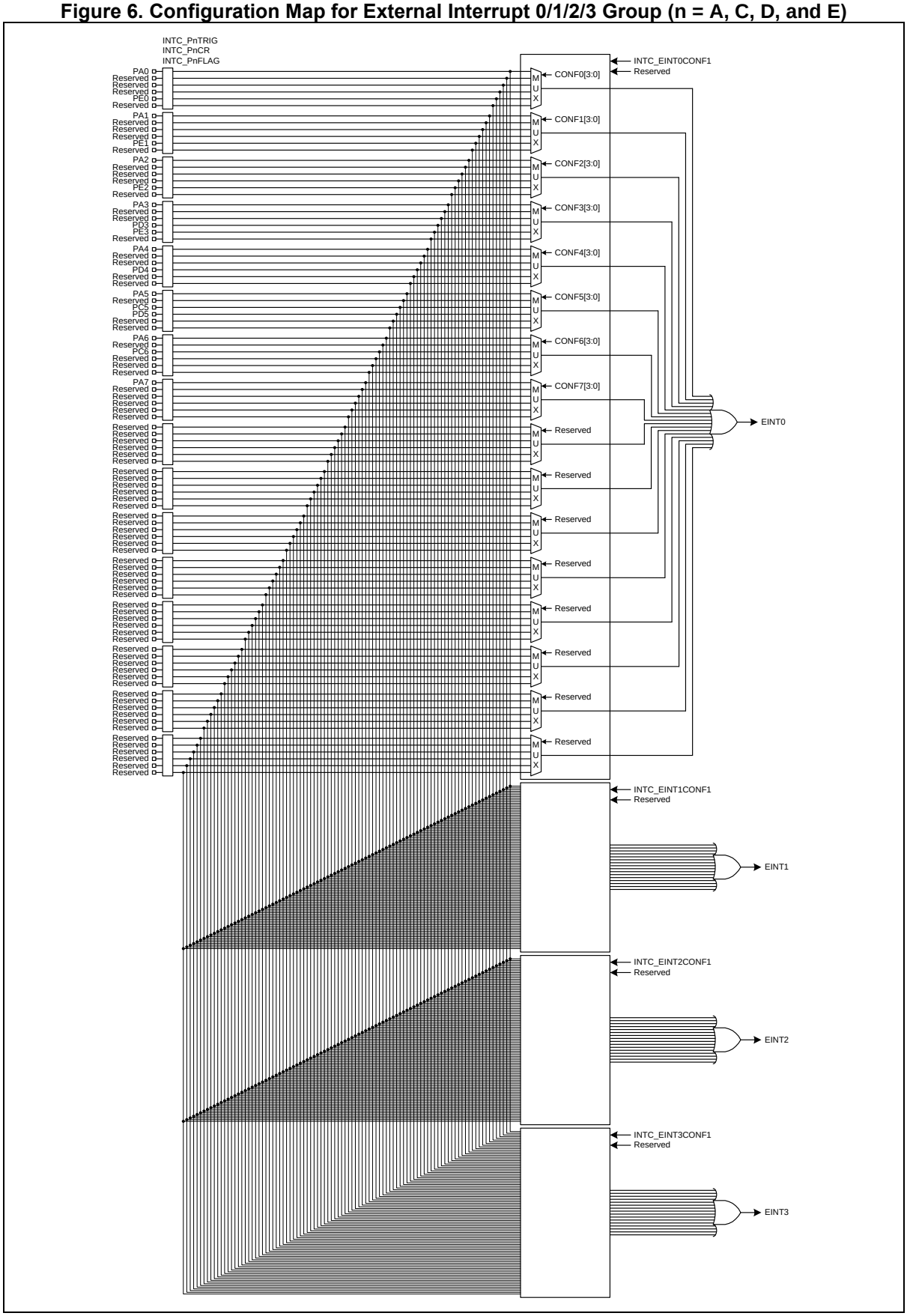

3.3.5 INTC_MSK: interrupt source mask register

INTC_MSK register is 32-bit size and accessible in 32/16/8-bit.

INTC_MSK=0x4000_1400

31	30	29	28	27	26	25	24	23	22	21	20	19	18	17	16	15	14	13	12	11	10	9	8	7	6	5	4	3	2	1	0
IMSK31	IMSK30	IMSK29	IMSK28	IMSK27	IMSK26	IMSK25	IMSK24	IMSK23	IMSK22	IMSK21	IMSK20	IMSK19	IMSK18	IMSK17	IMSK16	IMSK15	IMSK14	IMSK13	IMSK12	IMSK11	IMSK10	IMSK9	IMSK8	IMSK7	IMSK6	IMSK5	IMSK4	IMSK3	IMSK2	IMSK1	IMSK0
0	0	0	0	0	0	0	0	0	0	0	0	0	0	0	0	0	0	0	0	0	0	0	0	0	0	0	0	0	0	0	0
RW	RW	RW	RW	RW	RW	RW	RW	RW	RW	RW	RW	RW	RW	RW	RW	RW	RW	RW	RW	RW	RW	RW	RW	RW	RW	RW	RW	RW	RW	RW	RW

x	IMSKx	Interrupt Source Mask bit, x: 0 to 31	
		0	Mask. The corresponding interrupt is disabled.
		1	Unmask.

NOTES:

1. A mask interrupt source is not used as a wake-up source on “sleep”/”deep sleep” mode.
2. The corresponding interrupts of IMSKx are listed below:

Table 6. Corresponding Interrupts of IMSKx

Source Mask	INTERRUPT SOURCE NAME
IMSK0	LVI
IMSK1	WUT
IMSK2	WDT
IMSK3	EINT0
IMSK4	EINT1
IMSK5	EINT2
IMSK6	EINT3
IMSK7	TIMER40
IMSK8	TIMER41
IMSK9	TIMER42
IMSK10	I2C0
IMSK11	USART10
IMSK12	SPI1
IMSK13	Reserved
IMSK14	
IMSK15	TIMER50
IMSK16	Reserved
IMSK17	
IMSK18	ADC
IMSK19	UART0
IMSK20	TS
IMSK21	TIMER43
IMSK22	CMP[1:0]
IMSK23	Reserved
IMSK24	
IMSK25	LPUART0
IMSK26	Reserved
IMSK27	
IMSK28	RTCC, T60
IMSK29	Reserved
IMSK30	
IMSK31	

4 Control memory organization

Figure 7 shows addressable memory space in memory map.

Figure 7. Main Memory Map

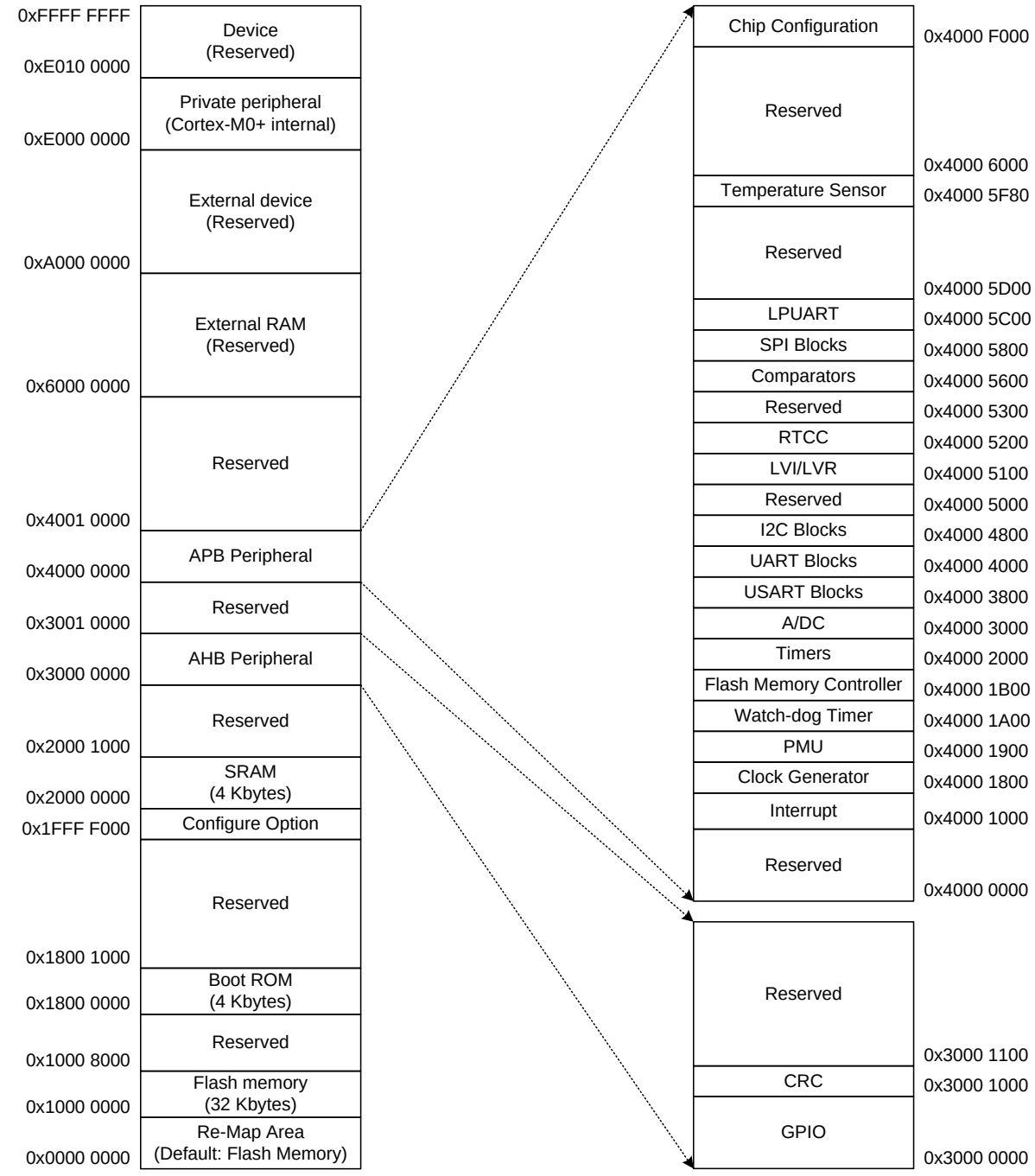

NOTE: Access to the reserved area may cause a malfunction.

4.1 Internal SRAM

The A31L22x series has a block of 0-wait on-chip SRAM. Its size is 4KB, and its base address is 0x2000_0000. The SRAM's memory area is mainly used for data memory and stack memory. It is possible to locate code area in the SRAM memory for fast operation or for Flash erase or program operation for self-program.

This device does not support memory remapping. Therefore, the jump and return are required to process the code in SRAM memory area.

4.2 Boot mode

4.2.1 Boot mode pins

The A31L22x series has Boot mode to program the internal Flash memory. Boot mode is activated when the BOOT pin is set to “Low” level at reset timing. (For normal operation mode, the BOOT pin is set to “High” level.)

Boot mode supports the UART boot using the TXD10/RXD10 ports.

Table 7 introduces pins used in the Boot mode.

Table 7. Boot Mode Pin List

Block	Pin name	Direction	Description
SYSTEM	nRESET	I	Reset Input signal
	BOOT/PD5	I	‘0’ to enter Boot mode
UART mode of USART10	RXD10/PA3	I	UART Boot Receive Data
	TXD10/PA2	O	UART Boot Transmit Data

4.2.2 Boot mode connection

Users can design the target board using Boot mode ports – UART mode of USART10.

Figure 8 shows an example diagram of connections in Boot mode.

Figure 8. Connection Diagram of UART Boot

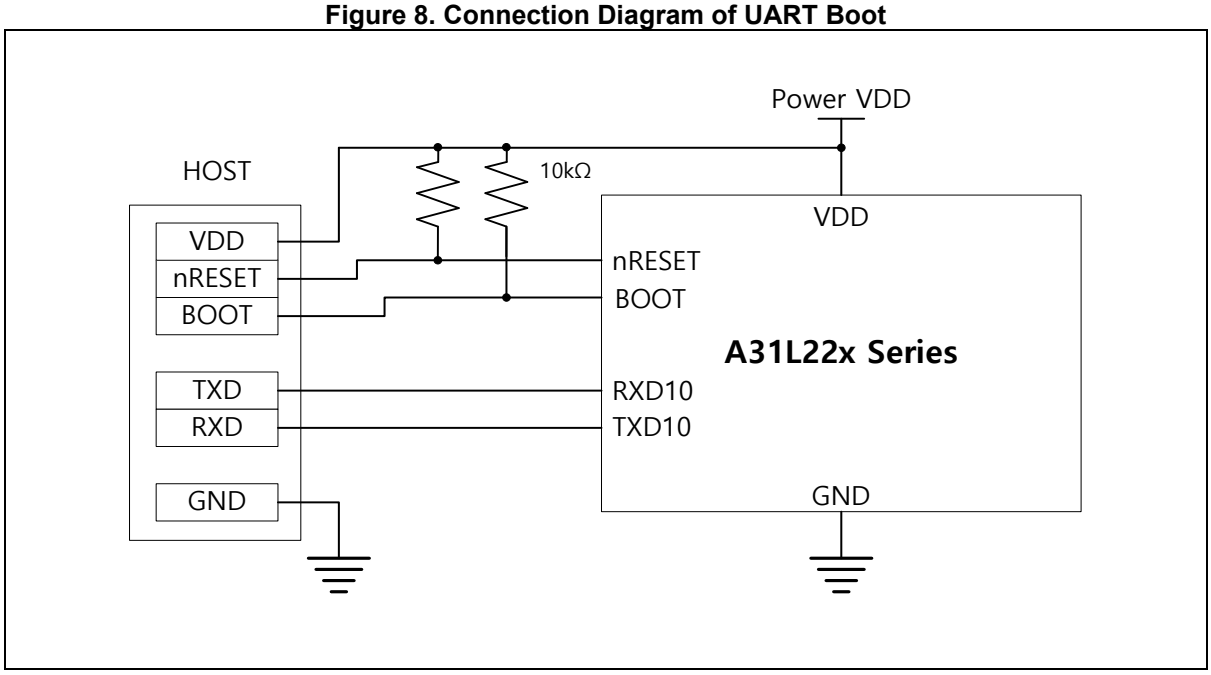

4.3 Flash memory

The A31L22x series has built-in Flash memory with the following features:

- 32 or 16KB Flash memory
- 32-bit read data bus width
- 128-byte page size
- Page erase and bulk erase available
- 128-byte unit program

Table 8. Internal Flash Memory Specification

Item	Description
Size	32KB
Start address	0x1000_0000
End address	0x1000_7FFF
Page size	128-byte
Total page count	256 pages
PGM unit	128-byte
Erase unit	128-byte or bulk

Figure 9. Internal Flash Memory Block Diagram

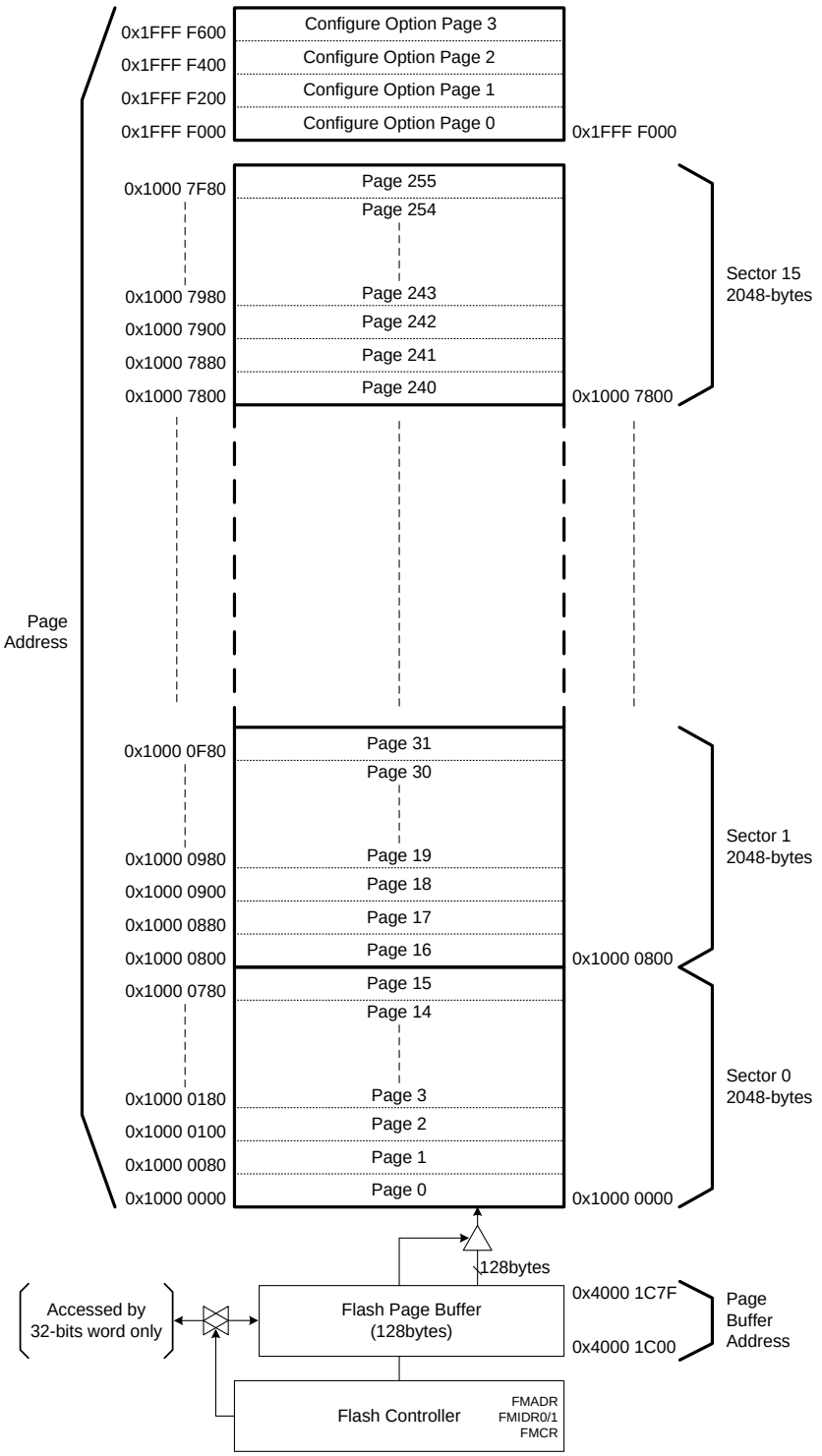

NOTES:

1. If an instruction of a size other than the 32-bit size is used to write data to the buffer, incorrect data is written.
2. Each of Configure Option Pages (page0/1/2/3) is 128-byte size, respectively.

4.3.1 Registers

Base address and register map of the Flash memory controller are shown in Table 9 and Table 10.

Table 9. Base Address of Flash Memory Controller

Name	Base address
Flash memory controller	0x4000_1B00

Table 10. Flash Memory Controller Register Map

Name	Offset	Type	Description	Reset Value
FMC_ADR	0x0000	RW	Flash Memory Address Register	0x5FFFFF80
FMC_IDR1	0x0004	RW	Flash Memory Identification Register 1	0x00000000
FMC_IDR2	0x0008	RW	Flash Memory Identification Register 2	0x00000000
FMC_CR	0x000C	RW	Flash Memory Control Register	0x00000000
FMC_BCR	0x0010	RW	Flash Memory Configure Area Bulk Erase Control Register	0x00000000
FMC_ERFLAG	0x0014	RW	Flash Memory Error Flag	0x00000000
FMC_PAGEBUF	0x0100-0x017F	WO	Flash Memory Page Buffer Area	0x00000000

4.3.1.1 FMC_ADR: Flash memory address register

FMC_ADR register is used to remember the internal Flash memory address. This register is 32-bit size.

FMC_ADR=0x4000_1B00

31	30	29	28	27	26	25	24	23	22	21	20	19	18	17	16	15	14	13	12	11	10	9	8	7	6	5	4	3	2	1	0
ADDR																															
0x5FFF_FF80																															
RW																															

31 0	ADDR	Flash Memory Address Pointer. This register is reset to 0x5FFFFF80 immediately after a single operation.

NOTE: The LSB-7bits of the target flash address is always considered to “0000000b”.

4.3.1.2 FMC_IDR1: Flash memory identification register 1

FMC_IDR1 register is an internal Flash memory identification register for Flash mode. This register is 32-bit size.

FMC_IDR1=0x4000_1B04

31	30	29	28	27	26	25	24	23	22	21	20	19	18	17	16	15	14	13	12	11	10	9	8	7	6	5	4	3	2	1	0
ID1																															
0x0000_0000																															
RW																															

31	ID1	Flash Memory Identification 1	
0		0x08192A3B	Identification value for a Flash mode
		Others	No identification value

4.3.1.3 FMC_IDR2: Flash memory identification register 2

FMC_IDR2 register is an internal Flash memory identification register for Flash mode. This register is 32-bit size.

FMC_IDR2=0x4000_1B08

31	30	29	28	27	26	25	24	23	22	21	20	19	18	17	16	15	14	13	12	11	10	9	8	7	6	5	4	3	2	1	0
ID2																															
0x0000_0000																															
RW																															

31	ID2	Flash Memory Identification 2	
0		0x4C5D6E7F	Identification value for a Flash mode
		Others	No identification value

NOTES:

1. The FMC_IDR1/2 registers are automatically cleared to logic 0x00000000 immediately after one time operation except “Flash page buffer reset mode”.
2. The FMC_IDR1/2 registers should be written with correct values in turn.
3. If incorrect values are written to the FMC_IDR1/2 registers, the registers are cleared to logic 0x00000000.

4.3.1.4 FMC_CR: Flash memory control register

FMC_CR register is an internal Flash memory control register. This register is 32-bit size.

FMC_CR=0x4000_1B0C

31 30 29 28 27 26 25 24	23 22 21 20 19 18 17 16	15 14 13 12 11 10 9 8	7	6 5 4	3 2 1 0
WTIDKY		**FMKEY**	**FMBUSY**	**Reserved**	**FMOD**
0x0000		**0x00**	**0**	**000**	**0000**
WO		**RW**	**RO**	**-**	**RW**

31 16	WTIDKY	Write Identification Key. When writing, write 0x6C93 to these bits, or else writing is ignored.	
15 8	FMKEY	Flash Memory Operation Area Selection.	
		0x00	Selects no area but for Flash page buffer reset mode.
		0x38	Selects “configure option area” for Flash memory erase/write.
		0xA4	Selects “Flash memory area” for Flash memory erase/write.
		Others	Not allowed. FMOPFLAG will be set.
7	FMBUSY	Flash Memory Operation Mode Busy.	
		0	No effect.
		1	Busy.
3 0	FMOD	Flash Memory Operation Mode Selection.	
		0001	“Flash page buffer reset mode” and start regardless of the Flash operation rule. (Clear all 128bytes page buffer to 0xFFFFFFFF)
		0010	“Flash page erase mode” and start when the Flash operation rule is satisfied.
		0100	“Flash page write mode” and start when the Flash operation rule is satisfied.
		1000	“Flash bulk erase mode” and start when the Flash operation rule is satisfied.
		Others	Not allowed. FMOPFLAG will be set.

NOTES

1. During a Flash memory operation mode, all interrupts are on disable regardless of enable bits.
2. The FMKEY[7:0] and FMOD[3:0] bits are automatically cleared to logic “0x00” immediately after a single operation.

4.3.1.5 FMC_BCR: Flash memory configure area bulk erase control register

FMC_BCR register is used to permit bulk erase. This register is 32-bit size.

FMC_BCR=0x4000_1B10

31 30 29 28 27 26 25 24 23 22 21 20 19 18 17 16	15 14 13 12	11 10 9 8	7 6 5 4	3 2 1 0
WTIDKY	**Reserved**	**CNF3BEN**	**CNF2BEN**	**CNF1BEN**
0x0000	**0000**	**0000**	**0000**	**0000**
WO	**–**	**RW**	**RW**	**RW**

31	WTIDKY	Write Identification Key.	
16		When writing, write 0xC1BE to these bits, or else writing is ignored.	
11	CNF3BEN	Configure Option Page 3 Bulk Erase Enable.	
8		0x5	Permit “Configure Option Page 3” erase at bulk erase
		Others	Protect “Configure Option Page 3” erase at bulk erase
7	CNF2BEN	Configure Option Page 2 Bulk Erase Enable.	
4		0x5	Permit “Configure Option Page 2” erase at bulk erase
		Others	Protect “Configure Option Page 2” erase at bulk erase
3	CNF1BEN	Configure Option Page 1 Bulk Erase Enable.	
0		0x5	Permit “Configure Option Page 1” erase at bulk erase
		Others	Protect “Configure Option Page 1” erase at bulk erase
NOTE:	This register is automatically cleared to logic “0x00” immediately after one time operation.		

4.3.1.6 FMC_ERFLAG: Flash memory error flag register

FMC_ERFLAG is 32-bit size, and accessible in 32/16/8-bit.

FMC_ERFLAG=0x4000_1B14

31 30 29 28 27 26 25 24 23 22 21 20 19 18 17 16	15 14 13 12 11 10 9 8	7 6 5 4 3 2	1	0
Reserved			**INSTFLAG**	**FMOPFLAG**
0x000000		**000000**	**0**	**0**
–			**RW**	**RW**

1	INSTFLAG	Don’t care	
0	FMOPFLAG	Error bit of Flash Memory Operation Procedure. This bit is set to logic 1 if there is a wrong procedure for Flash memory operation.	
		0	No wrong procedure.
		1	A wrong procedure occurred. The bit is cleared to ‘0’ when ‘1’ is written.

4.3.2 Procedure for Flash memory operation

- The high frequency internal RC oscillator (HIRC) should be enabled by S/W for Flash memory operation.
- The procedure will be cleared, the related registers will be reset, and FMOPFLAG will be set if wrong sequence is detected.
- The address range is 0x10000000 to 0x17FFFFFF when “Flash memory area” is selected.
- The address range is 0x1FFFF000 to 0x1FFFFFFF when “configure option area” is selected.
- If the CPU is in the Flash memory, the CPU will halt while the Flash memory is programmed.
- The “Configure Option Page 0” won’t be erased at Flash bulk erase mode.
- The “Configure Option Page 1/2/3” can be erased at Flash bulk erase mode if the CNFxBEN has correct values
- The CPU should not be in the Flash memory area on Flash bulk erase mode.
- A write to the Flash related register is ignored during Flash operation.
- An NMI source should not be selected during Flash memory operation is activated.
- The LVR should be enabled during Flash memory operation is activated (Recommended: 2.17V over).
- The global interrupt should be disabled.
- The CPU should not enter SLEEP and DEEP SLEEP mode during Flash erase/write mode.

4.3.2.1 Page Erase procedure

1. Write 0x5FFFFFFF to FMC_ADR when the register is equal to 0x5FFFFF80.
2. Write 0x08192A3B to FMC_IDR1 register when the FMC_ADR register is equal to 0x5FFFFFFF.
3. Write 0x4C5D6E7F to FMC_IDR2 register when the FMC_ADR register is equal to 0x5FFFFFFF.
4. Write 0x6C930001 to FMC_CR register for page buffer reset when the FMC_ADR register is equal to 0x5FFFFFFF.
5. Clear page buffer (128bytes) by writing 0xFFFFFFFF repeatedly during the FMC_ADR register is 0x5FFFFFFF.
6. Write a page address to FMC_ADR register.
7. Read and check the FMC_IDR1 and FMC_IDR2 registers in turn.
8. Write 0x6C93A402 (Flash memory area) or 0x6C933802 (configure option area) to FMC_CR register.
9. Check whether the FMBUSY bit is ‘0’ or not.
10. Verify the erased page of Flash memory.

4.3.2.2 Byte/Page Write procedure

1. Write 0x5FFFFFFF to FMC_ADR when the register is equal to 0x5FFFFF80.
2. Write 0x08192A3B to FMC_IDR1 register when the FMC_ADR register is equal to 0x5FFFFFFF.
3. Write 0x4C5D6E7F to FMC_IDR2 register when the FMC_ADR register is equal to 0x5FFFFFFF.

4. Write 0x6C930001 to FMC_CR register for page buffer reset when the FMC_ADR register is equal to 0x5FFFFFFF.
5. Write data to page buffer (any bytes) when the FMC_ADR register is equal to 0x5FFFFFFF.
6. Write a page address to FMC_ADR register.
7. Read and check the FMC_IDR1 and FMC_IDR2 registers in turn.
8. Write 0x6C93A404 (Flash memory area) or 0x6C933804 (configure option area) to FMC_CR register.
9. Check whether the FMBUSY bit is ‘0’ or not.
10. Verify the written page of Flash memory.

4.3.2.3 Flash Bulk Erase procedure

1. Write 0x5FFFFFFF to FMC_ADR when the register is equal to 0x5FFFFF80.
2. Write 0x08192A3B to FMC_IDR1 register when the FMC_ADR register is equal to 0x5FFFFFFF.
3. Write 0x4C5D6E7F to FMC_IDR2 register when the FMC_ADR register is equal to 0x5FFFFFFF.
4. Write 0x6C930001 to FMC_CR register for page buffer reset when the FMC_ADR register is equal to 0x5FFFFFFF.
5. Write the value 0x5F9A30D7 to FMC_ADR register.
6. Read and check the FMC_IDR1 and FMC_IDR2 register in turn.
7. Write 0x6C93A408 to FMC_CR register.
8. Check whether the FMBUSY bit is ‘0’ or not.
9. Verify all the pages of Flash memory.

4.3.2.4 Flash Bulk Erase procedure including configure option area

1. Write 0x5FFFFFFF to FMC_ADR when the register is equal to 0x5FFFFF80.
2. Write 0x08192A3B to FMC_IDR1 register when the FMC_ADR register is equal to 0x5FFFFFFF.
3. Write 0x4C5D6E7F to FMC_IDR2 register when the FMC_ADR register is equal to 0x5FFFFFFF.
4. Write 0x6C930001 to FMC_CR register for page buffer reset when the FMC_ADR register is equal to 0x5FFFFFFF.
5. Write the value 0xC1BE0VVV to FMC_BCR register. If V==5, the corresponding option page will be erased.
6. Write the value 0x5F9A30D7 to FMC_ADR register.
7. Read and check the FMC_IDR1 and FMC_IDR2 register in turn.
8. Write 0x6C93A408 to FMC_CR register.
9. Check whether the FMBUSY bit is ‘0’ or not.
10. Verify all the pages of Flash memory.

4.4 Configure option area

Configuration option area of the A31L22x series is used for system related trimming values, user option, and user data. The configure option area consists of four pages in the Flash memory, which can be erased and written by the Flash memory controller. This area can be read by any instruction.

The four pages of the configuration option area are listed in the followings:

- Page 0: System related trimming values and 128-bit unique device ID registers
- Page 1: User option for Read Protection, watchdog timer, and LVR voltage level configurations
- Page 2: User data 0 area
- Page 3: User data 1 area

Figure 10. Configure Option Area Structure

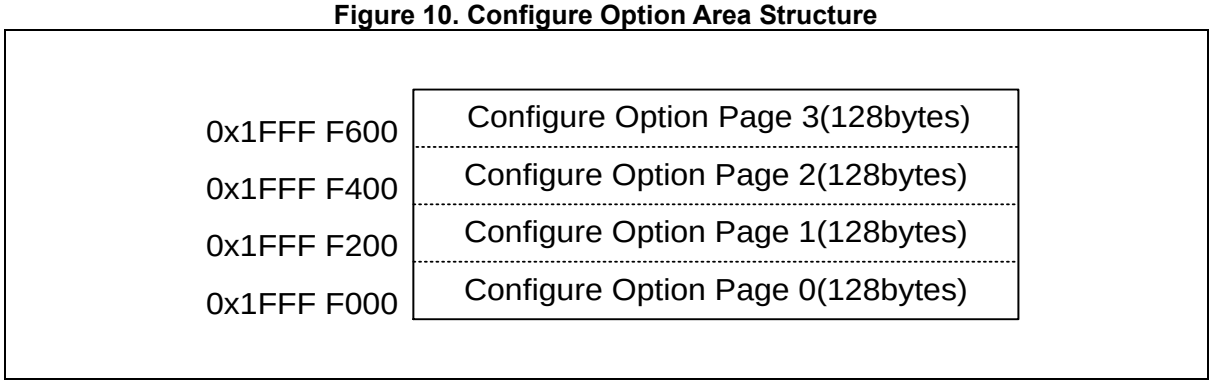

4.4.1 Configure option page

Base address of the configuration option area ranges from 0x1FFF_F000 to 0x1FFF_F600. The area map is shown in Table 11.

Table 11. Configuration Option Area Map

Page	NAME	ADDRESS	DESCRIPTION
0	-	0x1FFF_F000 to 0x1FFF_F047 0x1FFF_F060 to 0x1FFF_F07F	System Trimming Values
	TS_FREQ_T30	0x1FFF_F048	Temperature Sensor Output Frequency acquired at 30℃ [Hz]
	TS_FREQ_T85	0x1FFF_F04C	Temperature Sensor Output Frequency acquired at 85℃ [Hz]
	TS_FREQ_T105	0x1FFF_F06C	Temperature Sensor Output Frequency acquired at 105℃ [Hz]
	CONF_MF1CNFIG	0x1FFF_F050	Manufacture Information 1 for 128-bit unique ID
	CONF_MF2CNFIG	0x1FFF_F054	Manufacture Information 2 for 128-bit unique ID
	CONF_MF3CNFIG	0x1FFF_F058	Manufacture Information 3 for 128-bit unique ID
	CONF_MF4CNFIG	0x1FFF_F05C	Manufacture Information 4 for 128-bit unique ID
1	CONF_RPCNFIG	0x1FFF_F200	Configuration for Read Protection
	CONF_WDTCNFIG	0x1FFF_F20C	Configuration for Watch-Dog Timer
	CONF_LVRCNFIG	0x1FFF_F210	Configuration for Low Voltage Reset
	CONF_CNFIGWTP1	0x1FFF_F214	Erase/Write Protection for Configure Option Page 1/2/3
	CONF_FMWTP1	0x1FFF_F240	Erase/Write Protection 1 for Flash Memory
2	**-**	0x1FFF_F400 to 0x1FFF_F47F	User Data Area 0
3	**-**	0x1FFF_F600 to 0x1FFF_F67F	User Data Area 1

4.4.1.1 TS_FREQ_T30: Temperature Sensor output frequency 1

The Temperature Sensor Output Frequency 1 is 32-bit Flash memory. This is accessible in 32/16/8-bit.

TS_FREQ_T30=0x1FFF_F048

31 30 29 28 27 26 25 24	23 22 21 20 19 18 17 16	15 14 13 12 11 10 9 8	7 6 5 4 3 2 1 0
Reserved	**F_T30**		

23 0	F_T30	Temperature Sensor Output Frequency acquired at 30℃ [Hz].

4.4.1.2 TS_FREQ_T85: Temperature Sensor output frequency 2

The Temperature Sensor Output Frequency 2 is 32-bit Flash memory. This is accessible in 32/16/8-bit.

TS_FREQ_T85=0x1FFF_F04C

31 30 29 28 27 26 25 24	23 22 21 20 19 18 17 16	15 14 13 12 11 10 9 8	7 6 5 4 3 2 1 0
Reserved	**F_T85**		

23 0	F_T85	Temperature Sensor Output Frequency acquired at 85℃ [Hz]. (Commercial grade)

4.4.1.3 TS_FREQ_T105: Temperature Sensor output frequency 3

The Temperature Sensor Output Frequency 3 is 32-bit Flash memory. This is accessible in 32/16/8-bit.

TS_FREQ_T105=0x1FFF_F06C

31 30 29 28 27 26 25 24	23 22 21 20 19 18 17 16	15 14 13 12 11 10 9 8	7 6 5 4 3 2 1 0
Reserved	**F_T105**		

23 0	F_T105	Temperature Sensor Output Frequency acquired at 105℃ [Hz]. (Industrial grade)

4.4.1.4 CONF_MF1CNFIG: configuration for manufacture information 1

The Configuration for Manufacture Information 1 is 32-bit Flash memory. This is accessible in 32/16/8-bit.

CONF_MF1CNFIG=0x1FFF_F050

31	30	29	28	27	26	25	24	23	22	21	20	19	18	17	16	15	14	13	12	11	10	9	8	7	6	5	4	3	2	1	0
XYCDN																															

31 0	XYCDN	X and Y Coordinates.

4.4.1.5 CONF_MF2CNFIG: configuration for manufacture information 2

The Configuration for Manufacture Information 2 is 32-bit Flash memory. This is accessible in 32/16/8-bit.

CONF_MF2CNFIG=0x1FFF_F054

31	30	29	28	27	26	25	24	23	22	21	20	19	18	17	16	15	14	13	12	11	10	9	8	7	6	5	4	3	2	1	0
LOTNO[23:0]																								WAFNO							

31 8	LOTNO[23:0]	Lot Number.
7 0	WAFNO	Wafer Number.

4.4.1.6 CONF_MF3CNFIG: configuration for manufacture information 3

The Configuration for Manufacture Information 3 is 32-bit Flash memory. This is accessible in 32/16/8-bit.

CONF_MF3CNFIG=0x1FFF_F058

31	30	29	28	27	26	25	24	23	22	21	20	19	18	17	16	15	14	13	12	11	10	9	8	7	6	5	4	3	2	1	0
LOTNO[55:24]																															

31 0	LOTNO[55:24]	Lot Number.

4.4.1.7 CONF_MF4CNFIG: configuration for manufacture information 4

The Configuration for Manufacture Information 4 is 32-bit Flash memory. This is accessible in 32/16/8-bit.

CONF_MF4CNFIG=0x1FFF_F05C

31	30	29	28	27	26	25	24	23	22	21	20	19	18	17	16	15	14	13	12	11	10	9	8	7	6	5	4	3	2	1	0
LOTNO[87:56]																															

31 0	LOTNO[87:56]	Lot Number.

4.4.1.8 CONF_RPCNFIG: configuration for Read Protection

The configuration for the Flash Memory Read Protection is 32-bit. This is accessible in 32/16/8-bit.

CONF_RPCNFIG=0x1FFF_F200

31	30	29	28	27	26	25	24	23	22	21	20	19	18	17	16	15	14	13	12	11	10	9	8	7	6	5	4	3	2	1	0
WTIDKY																												**Reserved**		**READP**	

31 4	WTIDKY	Write Identification Key These bits are the write key for “Read Protection”. So, The WTIDKY[27:0] should be kept with the 0x69C8A27. Otherwise, the Read Protection will be on level 2.		
1 0	READP	Read Protection for Flash Memory Area.		
		11	Read Protection level 0, No restriction for read/erase/write.	
		10	Read Protection level 1, Not readable/erasable/writable by “Debug” Bulk erasable only by ”Debug” Readable/erasable/writable by “Instruction from Flash Memory and RAM”	
		0x	Read Protection level 2, Where x is don’t care Not readable/erasable/writable by “Debug”/”Instruction from RAM” Bulk erasable only by “Instruction from RAM”/”Debug” Readable/erasable/writable by “Instruction from Flash Memory”	

NOTES:

1. The Read Protection level can be changed from lower level to higher level only.
2. The “Configure Option Page 1” cannot be erased by “Debug” unit on “Read Protection level 1/2” and by “Instruction from RAM” on “Read Protection level 2.
3. The configure option area may be read even if the “Read Protection” is on level 1 and 2.
4. A page unit erase/write except a bulk erase isn’t executable by “Instruction from RAM” regardless of the CONF_FMWTP1 register on Read Protection level 2.
5. A page unit erase/write except a bulk erase isn’t executable by “Debug” regardless of the CONF_FMWTP1 register on Read Protection level 1/2.
6. The Read Protection level will be ‘0’ on operation after bulk erase.

4.4.1.9 CONF_WDTCNFIG: configuration for Watchdog Timer

The configuration for watchdog timer is 32-bit Flash memory. This is accessible in 32/16/8-bit.

CONF_WDTCNFIG=0x1FFF_F20C

31 30 29 28 27 26 25 24	23 22 21 20 19 18 17 16	15 14 13 12 11 10 9 8	7 6 5 4	3	2	1	0
Reserved		**WRCMF**		**Reserved**	**WCLKMF**	**WRSTMF**	**WCNTMF**

15	WRCMF	Watchdog Timer RC Oscillator Master Configuration	
4		0x96D	The WDTRC oscillation is decided by the WDTRCEN of SCU_CLKSRCR register.
		0x2A7	Master enable WDTRC but disabled at DEEP SLEEP mode regardless the PMU_PWRCR.ALLPWR bits.
		Others	Master enable WDTRC but power off at shutdown mode.
		NOTE: If the WDTRC is selected for MCLK by SCU_SCCR register when the bits are not 0x96D, the CPU cannot wake up at DEEP SLEEP mode. So, only SLEEP mode on the above case should be used for power down.	
2	WCLKMF	Watchdog Timer Clock Selection Master Configuration	
		0	Watchdog Timer clock is selected by the WDTCLK of SCU_PPCLKSR register.
		1	Master selection WDTRC for Watchdog Timer clock
1	WRSTMF	Watchdog Timer Reset Enable Master Configuration	
		0	Master enable WDT reset
		1	Disable/Enable of WDT reset is decided by the RSTEN[5:0] of WDT_CR register.
0	WCNTMF	Watchdog Timer Counter Enable Master Configuration	
		0	Master enable WDT counter
		1	Disable/Enable WDT counter is decided by the CNTEN[5:0] of WDT_CR register.

4.4.1.10 CONF_LVRCNFIG: configuration for Low Voltage Reset

The configuration for low voltage reset is 32-bit Flash memory. This is accessible in 32/16/8-bit.

CONF_LVRCNFIG=0x1FFF_F210

31 30 29 28 27 26 25 24	23 22 21 20 19 18 17 16	15 14 13 12 11 10 9 8	7 6 5 4 3 2 1 0	
WTIDKY		**LVRENM**	**Reserved**	**LVRVS**

31 16	WTIDKY	Write Identification Key : 0x9D58 These bits are the write key for “LVR controller”.	
15 8	LVRENM	LVR Reset Operation Control Master Configuration	
		0xAA	LVR operation is decided by the LVREN of SCU_LVRCR register
		Others	Master enable LVR operation
2 0	LVRVS	LVR Voltage Selection.	
		111	1.50V
		110	1.87V
		101	2.02V
		100	2.17V
		011	2.32V
		010	2.47V
		001	2.64V
		000	2.78V

4.4.1.11 CONF_CNFIGWTP1: Erase/Write Protection for Configure Option Page 1/2/3

The Erase/Write Protection for Configure Option Page is 32-bit Flash memory. This is accessible in 32/16/8-bit.

CONF_CNFIGWTP1=0x1FFF_F214

31 30 29 28 27 26 25 24	23 22 21 20 19 18 17 16	15 14 13 12 11 10 9 8	7 6 5 4	3	2	1	0
Reserved				**Reserved**	**CP3WP**	**CP2WP**	**CP1WP**

2 CP3WP	Configure Option Page 3 Erase/Write Protection	
	0	Enable protection (Not erasable/writable by instruction)
	1	Disable protection (Erasable/writable by instruction)
1 CP2WP	Configure Option Page 2 Erase/Write Protection	
	0	Enable protection (Not erasable/writable by instruction)
	1	Disable protection (Erasable/writable by instruction)
0 CP1WP	Configure Option Page 1 Erase/Write Protection	
	0	Enable protection (Not erasable/writable by instruction)
	1	Disable protection (Erasable/writable by instruction)
NOTE: The Configure Option Page which is protected cannot be erased by page unit.		

4.4.1.12 CONF_FMWTP1 Erase/Write Protection 1 for Flash memory

The Erase/Write Protection 1 for Flash memory is 32-bit Flash memory. This is accessible in 32/16/8-bit.

CONF_FMWTP1=0x1FFF_F240

31	30	29	28	27	26	25	24	23	22	21	20	19	18	17	16	15	14	13	12	11	10	9	8	7	6	5	4	3	2	1	0
Reserved																SWTP15	SWTP14	SWTP13	SWTP12	SWTP11	SWTP10	SWTP9	SWTP8	SWTP7	SWTP6	SWTP5	SWTP4	SWTP3	SWTP2	SWTP1	SWTP0

n	SWTPn	Flash Memory Erase/Write Protection bits, n: 0 to 15 (Sector 0 to Sector 15)	
		0	Protect “flash memory sector n erase/write”
		1	Permit “flash memory sector n erase/write”

5 System Control Unit (SCU)

The A31L22x series has a built-in intelligent power control block, which manages analog blocks and operating modes. Internal reset and clock signals are controlled by SCU block to maintain optimized system performance and power dissipation.

5.1 SCU block diagram

Figure 11 shows the SCU block diagram.

Figure 11. SCU Block Diagram

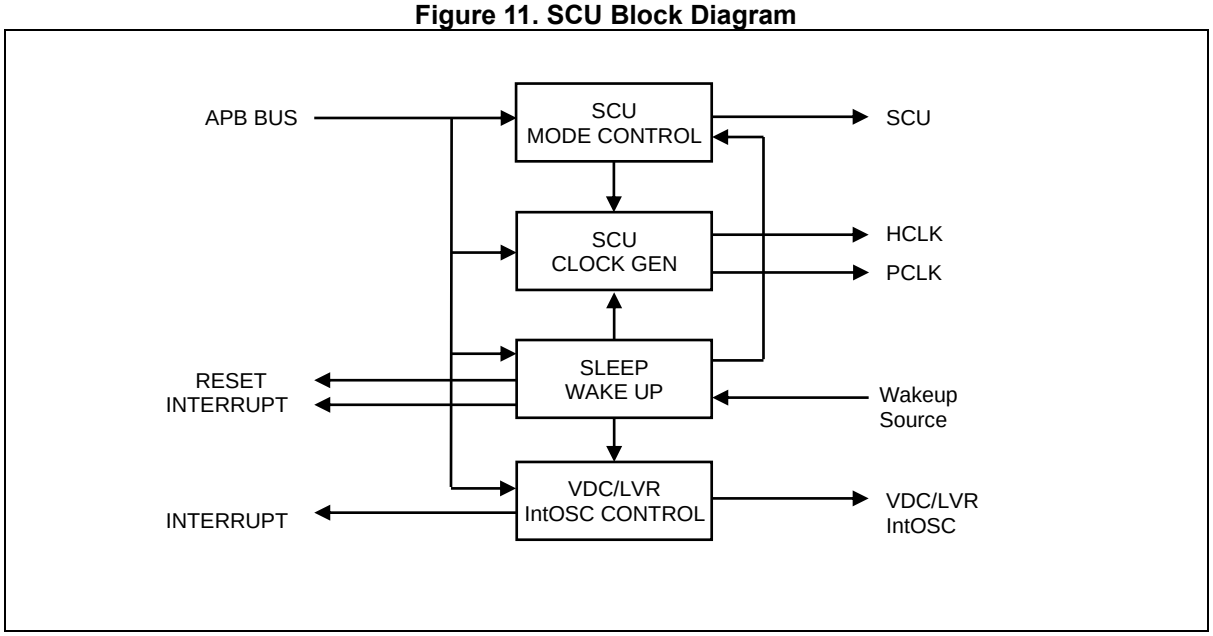

5.2 Clock system

The A31L22x series has two main operating clocks. One is HCLK, which supplies the clock to the CPU and AHB bus system. The other one is PCLK, which supplies the clock to the peripheral systems.

Users can control the clock system variation by software. Figure 12 shows the clock system of the A31L22x series and Table 12 shows the descriptions for clock sources.

Figure 12. Clock Source Configuration

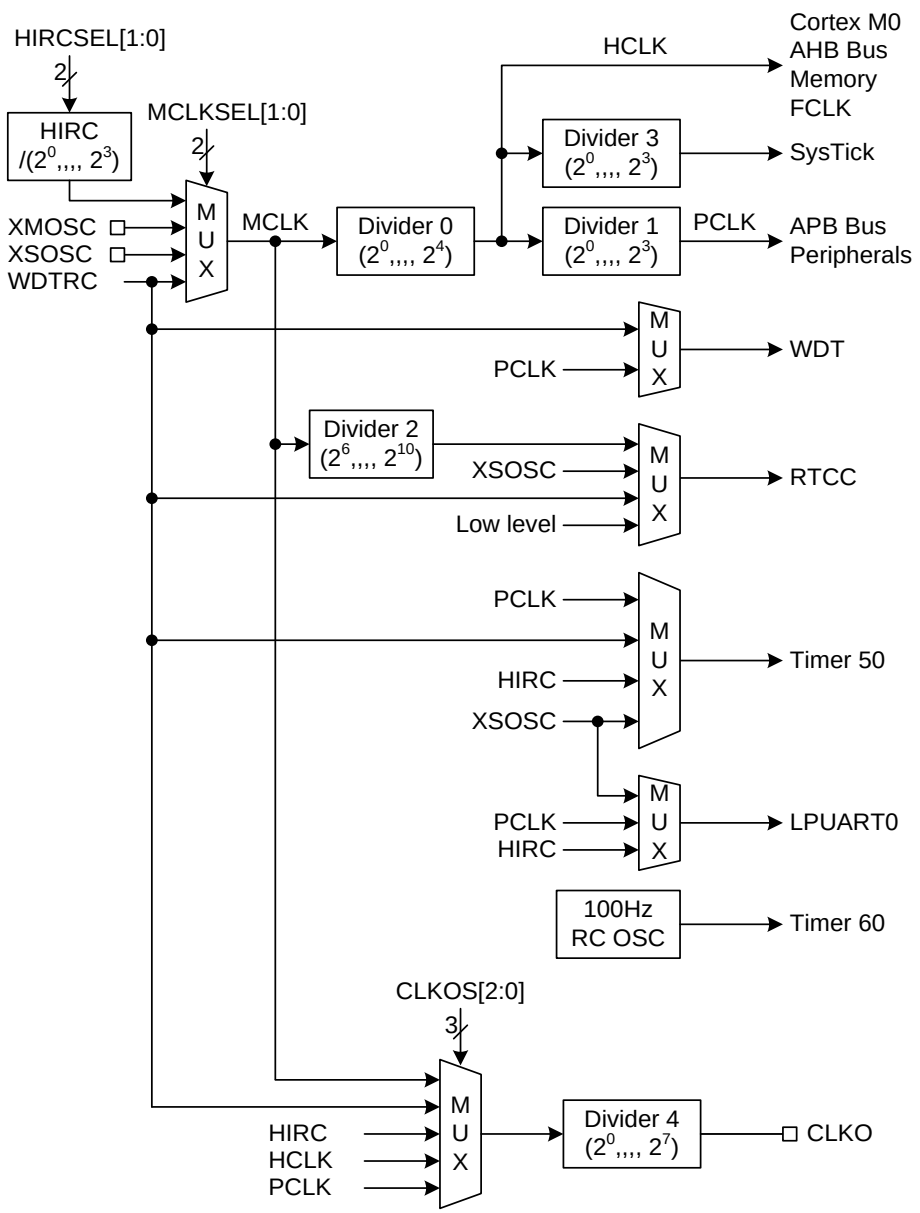

NOTE: If the WRCMF[11:0] bits of configuration are not equal to 0x96D, the WDTRC oscillation can't be disabled by the WDTRCEN bit of SCU_CLKSRCR register.

Each mux to switch clock source has a glitch-free circuit. So a clock can be switched without glitch risks. When you change the clock mux control, be sure both clock sources are alive. If either is not alive, clock change operation stops and system will shut down and not recover.

Table 12. Clock Sources

Clock name	Mnemonic	Frequency	Description
Main OSC	XMOSC	• X-TAL (2MHz to 16MHz) • External Clock (2MHz to 32MHz)	• External Main Crystal OSC • External Main Clock
Sub OSC	XSOSC	X-TAL (32.768kHz)	External Sub Crystal OSC
Internal RC OSC	HIRC	2MHz to 32MHz	High Frequency Internal RC OSC
WDT RC OSC	WDTRC	40kHz	Watchdog Timer RC OSC

5.2.1 HCLK clock domain

HCLK clock feeds the clock to the CPU and AHB bus. Cortex-M0+ CPU requires 2 clocks, FCLK and HCLK. FCLK is a free running clock and is always running except during power down mode. HCLK can be stopped during SLEEP mode.

The HCLK clock operates the BUS system and memory systems. Max BUS operating clock speed is 32MHz. HCLK frequency should be limited to a frequency of 32MHz or lower.

5.2.2 Miscellaneous clock domain

Various clock sources are required for each functional block. The SCU provides clock source selectivity with dedicated pre-scaler for each functional block. The clock selection mux does not support glitch-free function, so the clock is unpredictable during clock selection. Figure 13 shows the configurations for miscellaneous clocks.

Figure 13. Miscellaneous Clock Configuration

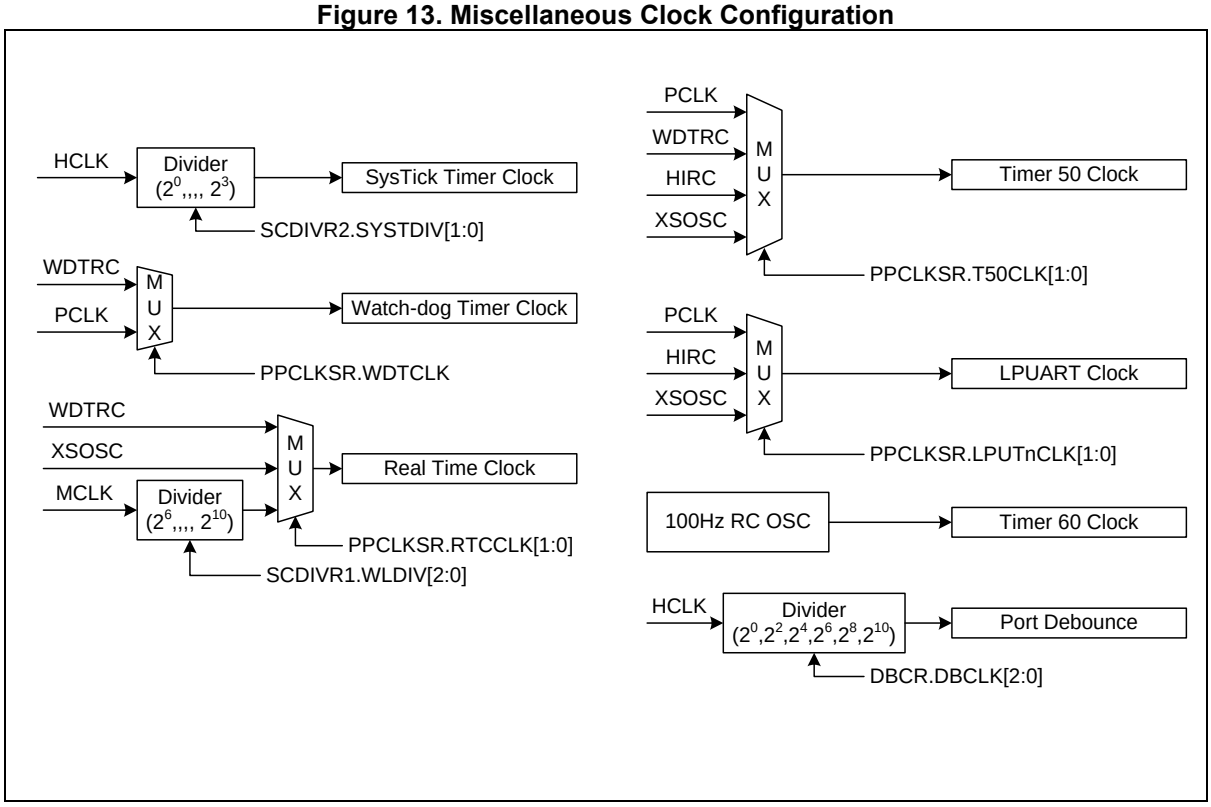

5.2.3 PCLK clock domain

PCLK is the master clock for all the peripherals except for the CRC generator and ports. It can shut down during power down mode. Each peripheral clock is generated by SCU_PPCLKEN1 and SCU_PPCLKEN2 register set. Figure 12 illustrates the PCLK clock distributions. The peripherals are not accessible even by reading its registers until each PCLK clock of each block is enabled.

5.2.4 Clock configuration procedure

After power on the device, a default system clock is generated by HIRC (2MHz) clock. The HIRC is enabled by default during power up sequence. Other clock sources are enabled by user controls and configuration options with a system clock.

XMOSC and XSOSC clocks are enabled by XMOSCEN and XSOSCEN bits of SCU_CLKSRCR register respectively. Before enabling XMOSC and XSOSC blocks, the pin mux configuration should be set for XIN/XOUT and SXIN/SXOUT functions. PE2/PE3 and PE0/PE1 pins are shared by XMOSC's XIN/XOUT function and XSOSC's SXIN/SXOUT function – PE_MOD and PE_AFSR1 registers should be configured properly.

After enabling the XMOSC and XSOSC blocks, a user can check stability of crystal oscillation through a clock monitoring control register, SCU_CMONCR. It takes more than 1ms to ensure stable crystal oscillation before changing the system clock.

Figure 14 shows an example flow chart to configure the system clock to XMOSC and XSOSC clock.

Figure 14. Clock Configuration Procedure

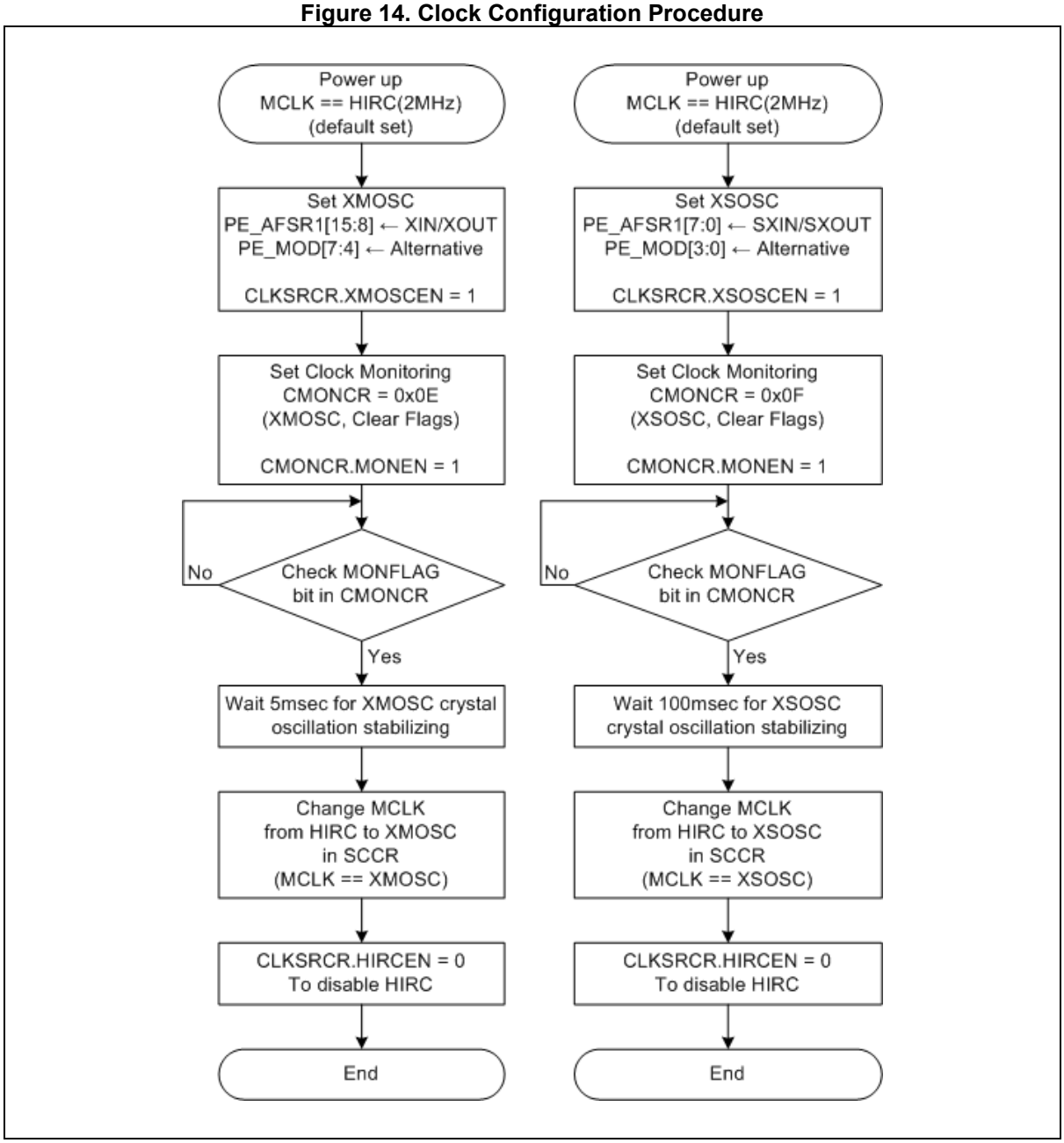

5.3 Reset

The A31L22x series has two system resets. One is the cold reset by POR, which is effective during power up or down sequence. The other is the warm reset, generated by several reset sources. The reset event makes the device to turn back to its initial state.

The cold reset has only one reset source, which is POR, while the warm reset has several reset sources as shown below:

- nRESET pin
- WDT reset
- LVR reset
- MON reset
- S/W reset
- CPU request reset
- WAKUP3 reset

5.3.1 Cold reset

The cold reset is one of important feature of the A31L22x series when it powers up. This characteristic will globally affect the system boot.

Internal VDC is enabled when VDD power is turned on. Internal VDD level slope follows the External VDD power slope. Internal POR trigger level is at 1.1V of the internal VDC voltage. At this time, boot operation begins.

Internal RC clock turns on and counts 6ms for internal VDC level to stabilize. At this time, external VDD voltage level should be bigger than initial LVR level (1.50V). After 6ms of counting, the CPU reset is released and operation begins.

Figure 15 shows waveform of power up sequence and internal reset.

Figure 15. Power-up POR Sequence

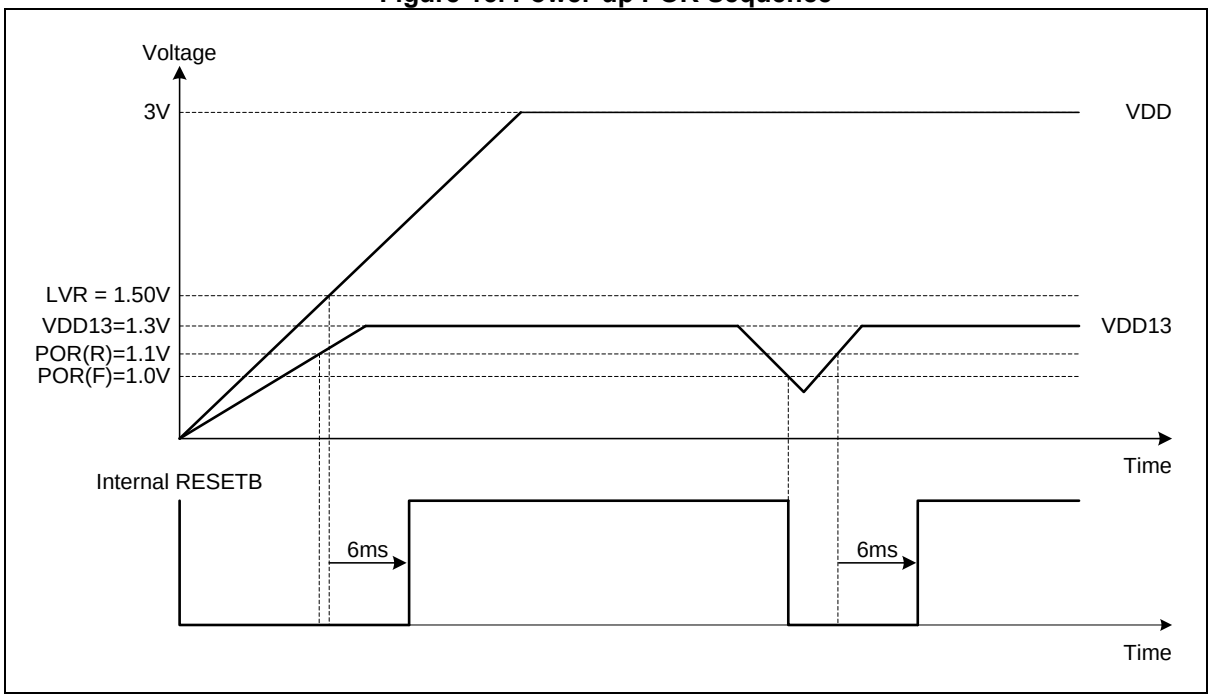

A register SCU_RSTSSR shows the POR reset status. The last reset comes from the POR. SCU_RSTSSR.PORSTA is set to ‘1’. After power on, this bit is always ‘1’ if the bit is not cleared by S/W. If abnormal internal voltage drop is detected during normal operation, the system will be reset and this bit also will be set to ‘1’.

When the cold reset is applied, the entire device returns to its initial state.

5.3.2 Warm reset

The warm reset event has several reset sources and some parts of the device return to their initial states when the warm reset takes place.

The warm reset status appears in a register SCU_RSTSSR. A reset for each peripheral block is controlled by a register SCU_PPRST. The reset can be masked independently.

Figure 16. Reset Configuration

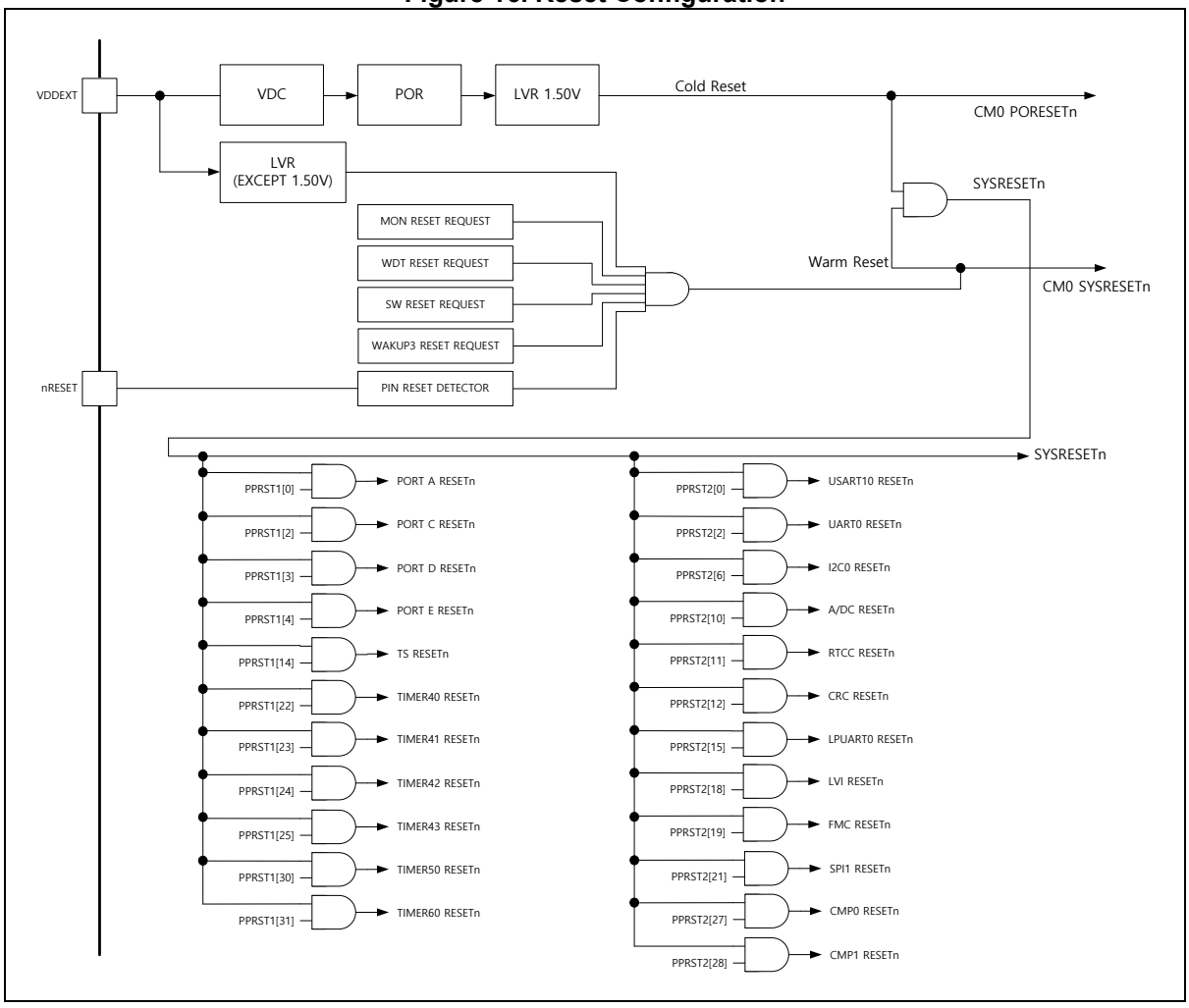

5.3.3 LVR reset

The LVR voltage level is set by a low voltage reset configuration register (CONF_LVRCNFIG) in the Configure Option Page 1. The LVR reset status appears in the register SCU_RSTSSR.

The LVR reset is controlled by the register SCU_LVRCR. The register is cleared to “0x00” when the POR/WAKUP3 reset occurs.

Figure 17. LVR Reset Timing Diagram

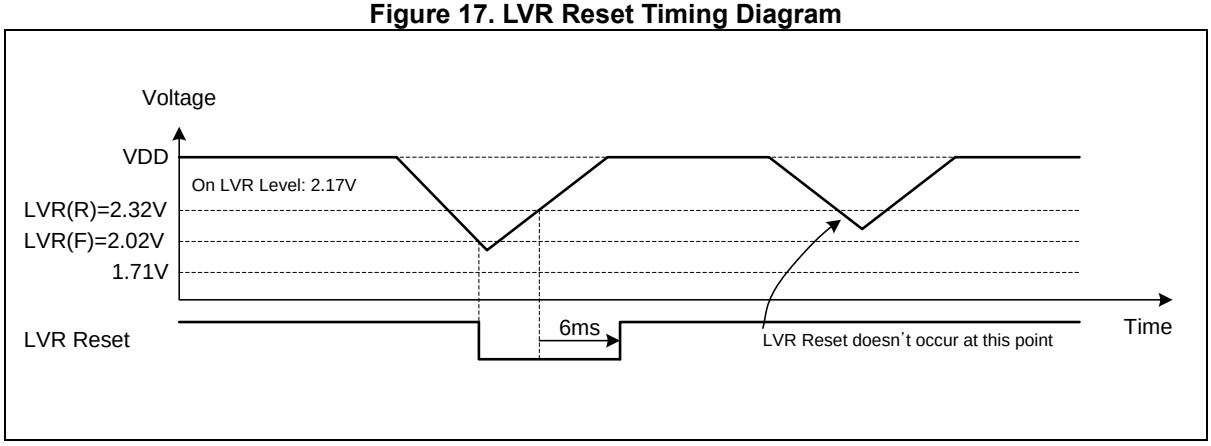

5.4 Operation mode

INIT mode is the initial state of the device when reset. At RUN mode, the chip runs at its max CPU performance with a high-speed clock system. At SLEEP and DEEP SLEEP mode, the chip runs at a low power consumption mode. The system saves power by halting the processor core and unused peripherals.

Figure 18 shows the operation mode transition diagram.

Figure 18. Operating Mode

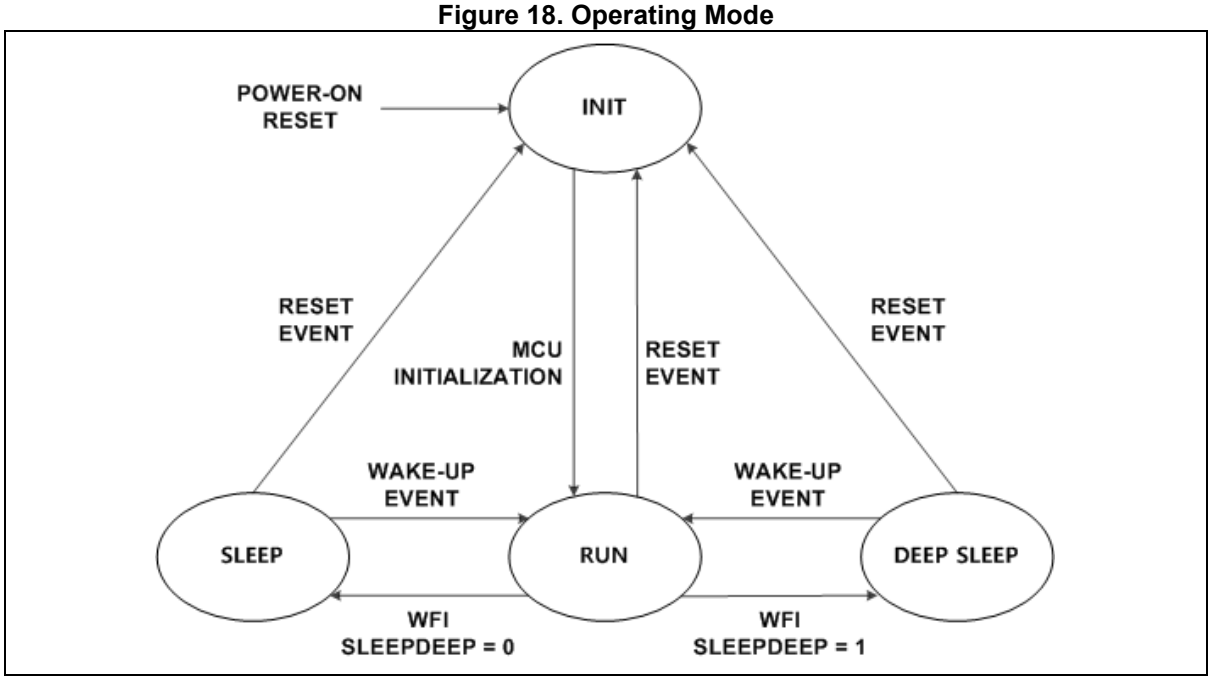

5.4.1 RUN mode

This mode is to operate CPU core and peripheral hardware with a high-speed clock. The device enters in the INIT state after reset, and then enters in the RUN mode.

5.4.2 SLEEP mode

The device stops only CPU in this mode. Each peripheral function turns on by a function enable bit and a clock enable bit of the register SCU_PPCLKEN.

5.4.3 DEEP SLEEP mode

The device stops not only CPU but also a selected system clock (MCLK) in this mode. RTCC with sub clock, T60, and watchdog timer with WDTRC still operate in DEEP SLEEP mode 0/2.

5.4.4 SHUT DOWN mode

The device stops CPU, a selected system clock (MCLK), and most of the peripherals in this mode (DEEP SLEEP mode 3). The T60 only can operate in SHUT DOWN mode.

5.5 Pin description for SCU

Table 13. Pins and External Signals for SCU

Pin name	Type	Description
nRESET	I	External Reset Input
XIN/XOUT	OSC	External Crystal Oscillator for Main Clock
SXIN/SXOUT	OSC	External Crystal Oscillator for Sub Clock
CLKO	O	Clock Output Monitoring Signal

5.6 Registers

Base address and register map of SCU (chip configuration) are shown in Table 14 and Table 15.

Table 14. Base Address of SCU (Chip Configuration)

Name	Base address
SCU (chip configuration)	0x4000_F000

Table 15. SCU Register Map (Chip Configuration)

Name	Offset	Type	Description	Reset value
SCU_VENDORID	0x0000	R	Vendor Identification Register	0x41424F56
SCU_CHIPID	0x0004	R	Chip Identification Register, Where n = 4 or 5.	0x4D31F01n
SCU_REVNR	0x0008	R	Revision Number Register	0x000000xx
–	–	–	Reserved	–
SCU_PMREMAP	0x0014	RW	Program Memory Remap Register	0x00000000
SCU_BTPSCR	0x0018	RW	Boot Pin Status and Control Register	0x000000xx
SCU_RSTSSR	0x001C	RW	Reset Source Status Register	0x000000xx
SCU_NMISRCR	0x0020	RW	NMI Source Selection Register	0x00000000
SCU_SWRSTR	0x0024	R	Software Reset Register	0x00000000
SCU_SRSTVR	0x0028	R	System Reset Validation Register	0x00000055
SCU_WUTCR	0x002C	RW	Wake-up Timer Control Register	0x00000000
SCU_WUTDR	0x0030	RW	Wake-up Timer Data Register	0x00001F40
–	–	–	Reserved	–
SCU_HIRCTRM	0x00A8	RW	High Frequency Internal RC Trim Register (HIRCNFIG)	0x0000xxxx
SCU_WDTRCTRM	0x00AC	RW	Watchdog Timer RC Trim Register (WDTRCNFIG)	0x000000xx

NOTE: The CHIPID is written by H/W if the proper configure address is read.

Base address and register map of SCU (clock generation) are shown in Table 16 and Table 17.

Table 16. Base Address of SCU (Clock Generation)

Name	Base address
SCU (clock generation)	0x4000_1800

Table 17. SCU Register Map (Clock Generation)

Name	Offset	Type	Description	Reset value
SCU_SCCR	0x0000	RW	System Clock Control Register	0x00000000
SCU_CLKSRCR	0x0004	RW	Clock Source Control Register	0x0000000C
SCU_SCDIVR1	0x0008	RW	System Clock Divide Register 1	0x00000000
SCU_SCDIVR2	0x000C	RW	System Clock Divide Register 2	0x00000000
SCU_CLKOCR	0x0010	RW	Clock Output Control Register	0x00000000
SCU_CMONCR	0x0014	RW	Clock Monitoring Control Register	0x00000000
SCU_PPCLKEN1	0x0020	RW	Peripheral Clock Enable Register 1	0x00000000
SCU_PPCLKEN2	0x0024	RW	Peripheral Clock Enable Register 2	0x00020000
SCU_PPCLKSR	0x0040	RW	Peripheral Clock Selection Register	0x00000000
SCU_PPRST1	0x0060	RW	Peripheral Reset Register 1	0x00000000
SCU_PPRST2	0x0064	RW	Peripheral Reset Register 2	0x00000000
SCU_XSOSC	0x0084	RW	Sub Oscillator Control Register	0x00000038

Base address and register map of SCU (LVR/LVI) are shown in Table 18 and Table 19.

Table 18. Base Address of SCU (LVR/LVI)

Name	Base address
SCU (LVR/LVI)	0x4000_5100

Table 19. SCU Register Map (LVR/LVI)

Name	Offset	Type	Description	Reset value
SCU_LVICR	0x0000	RW	Low Voltage Indicator Control Register	0x00000000
SCU_LVRCR	0x0004	RW	Low Voltage Reset Control Register	0x00000000

5.6.1 SCU_VENDORID: vendor id register

SCU_VENDORID register shows Vendor identification information. This register is a 32-bit read-only register.

SCU_CIDR=0x4000_F000

31	30	29	28	27	26	25	24	23	22	21	20	19	18	17	16	15	14	13	12	11	10	9	8	7	6	5	4	3	2	1	0
VENDID																															
0x4142_4F56																															
RO																															

31 0	VENDID	Vendor Identification bits. 0x4142_4F56

5.6.2 SCU_CHIPID: chip ID register

SCU_CHIPID register shows chip identification information. This register is a 32-bit read-only register.

SCU_CHIPID=0x4000_F004

31	30	29	28	27	26	25	24	23	22	21	20	19	18	17	16	15	14	13	12	11	10	9	8	7	6	5	4	3	2	1	0
CHIPID																															
0x4D31F014 or 0x4D31F015																															
RO																															

31 0	CHIPID	Chip Identification bits.	
		0x4D31F014	A31L222 (32KB Flash memory for program)
		0x4D31F015	A31L221 (16KB Flash memory for program)

5.6.3 SCU_REVNR: revision number register

SCU_REVNR register is a 32-bit read-only register. This register is accessible in 32/16/8-bit.

SCU_REVNR=0x4000_F008

31	30	29	28	27	26	25	24	23	22	21	20	19	18	17	16	15	14	13	12	11	10	9	8	7	6	5	4	3	2	1	0
Reserved																								**REVNO**							
0x000000																								**xx**							
–																								**RO**							

7 0	REVNO	Chip Revision Number. This value is assigned by the manufacturer.

5.6.4 SCU_PMREMAP: program memory remap register

SCU_PMREMAP register is 32-bit size.

SCU_PMREMAP=0x4000_F014

31 30 29 28 27 26 25 24	23 22 21 20 19 18 17 16	15 14 13 12 11 10 9 8	7 6 5 4 3 2 1 0
WTIDKY		**nPMREM**	**PMREM**
0x0000		**0x00**	**0x00**
WO		**WO**	**RW**

31 16	WTIDKY	Write Identification Key When writing, write 0xE2F1 to these bits, or else writing is ignored.
15 8	nPMREM	Write Complement Key When writing, write the complement value of PMREM[7:0], or else writing is ignored.
7 0	PMREM	Program Memory Remap. 0x69 Boot ROM is re-mapped to address 0x00000000. 0x10001000 of Flash memory is re-mapped to address 0x00001000. Others Flash memory is re-mapped to address 0x00000000. **NOTE**: The remapped program memory can be accessed from the original address.

5.6.5 SCU_BTPSCR: boot pin status and control register

SCU_BTPSCR register is 32-bit size and accessible in 32/16/8-bit.

SCU_BTPSCR=0x4000_F018

31 30 29 28 27 26 25 24	23 22 21 20 19 18 17 16	15 14 13 12 11 10 9 8	7	6 5	4 3 2 1	0
Reserved			**Reserved**	**BFIND**	**Reserved**	**BTPSTA**
0x000000			**0**	**xx**	**0000**	**x**
–			**–**	**RW**	**–**	**RO**

6 5	BFIND	BOOT Pin Function Indicator. The BFIND[1:0] bits are cleared to “00” by POR, the BFIND[1] bit is cleared to ‘0’ by nRESET, and the bits are not cleared by other system reset. One of the two of the following must be set in the BFIND[1:0] bits to check whether ISP is needed or not. 10 Check the BOOT pin when the system resets by nRESET including POR. 11 Check the BOOT pin when the system resets by POR and WAKUP3.
0	BTPSTA	BOOT Pin Status. 0 The BOOT pin is low level. 1 The BOOT pin is high level. Note) This bit is always ‘1’ if the BOOT pin is not selected for alternative function.

NOTE: When a system reset occurs, the PD5 pin is configured as alternative function for BOOT, the pull-up resistor is enabled, and the debounce filter is enabled.

5.6.6 SCU_RSTSSR: reset source status register

SCU_RSTSSR register shows reset source information when reset event is occurred. ‘1’ implies a reset event exists, while ‘0’ means a reset event does not exist for a corresponding reset source.

When a reset source is detected, ‘1’ is written into the corresponding bit position and reset status will be cleared.

SCU_RSTSSR register is 32-bit size and accessible in 32/16/8-bit.

SCU_RSTSSR=0x4000_F01C

31 30 29 28 27 26 25 24	23 22 21 20 19 18 17 16	15 14 13 12 11 10 9 8	7	6	5	4	3	2	1	0
Reserved			Reserved		MONSTA	SWSTA	EXTSTA	WDTSTA	LVRSTA	PORSTA
0x000000			00		x	x	x	x	x	x
-			-		RW	RW	RW	RW	RW	RW

5	MONSTA	Clock Monitoring Reset Status.	
		0	Not detected
		1	Clock monitoring reset is detected. The bit is cleared to ‘0’ when ‘1’ is written.
4	SWSTA	Software Reset Status.	
		0	Not detected
		1	Software reset is detected. The bit is cleared to ‘0’ when ‘1’ is written.
3	EXTSTA	External Pin Reset Status.	
		0	Not detected
		1	External pin reset is detected. The bit is cleared to ‘0’ when ‘1’ is written.
2	WDTSTA	Watchdog Timer Reset Status.	
		0	Not detected
		1	Watchdog Timer reset is detected. The bit is cleared to ‘0’ when ‘1’ is written.
1	LVRSTA	LVR Reset Status.	
		0	Not detected
		1	LVR reset is detected. The bit is cleared to ‘0’ when ‘1’ is written.
0	PORSTA	POR Reset Status.	
		0	Not detected
		1	POR reset is detected. The bit is cleared to ‘0’ when ‘1’ is written.

NOTES:

1. The PORSTA bit is set to “1b” and the other bits are cleared to “0b” when power-on reset occurs.
2. In case of wake-up in deep sleep mode 3 (shutdown), the PORSTA bit may not be set to “1b”. So, check the WAKUPST3 bit of PMU_PWRSR register.
3. The corresponding reset status bit may be set to “1b” if any reset signal is asserted during power-on reset occurs. For example, The EXTSTA bit may be set if the external reset is asserted during POR.

Figure 19. Reset Circuit Diagram

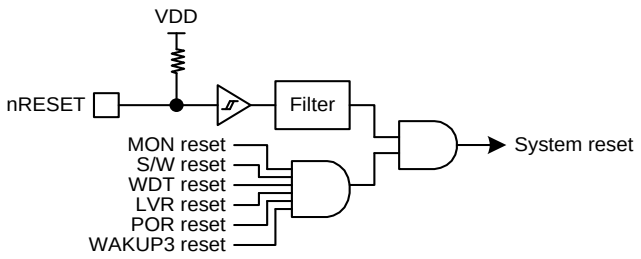

NOTE: A core S/W reset on debugger will reset only CPU.

5.6.7 SCU_NMISRCR: NMI source selection register

SCU_NMISRCR is the non-maskable interrupt configuration register, which can be set by software. SCU_NMISRCR register is 32-bit size, and accessible in 32/16/8-bit.

SCU_NMISRCR=0x4000_F020

31 30 29 28 27 26 25 24	23 22 21 20 19 18 17 16	15 14 13 12 11 10 9 8	7	6	5	4 3 2 1 0
Reserved			NMICON	MONINT	Reserved	NMISRC
0x000000			0	0	0	00000
-			RW	RW	-	RW

7	NMICON	Non-Maskable Interrupt (NMI) Control.
		0 Disable NMI
		1 Enable NMI
6	MONINT	Clock Monitoring Interrupt Selection.
		0 Non-select clock monitoring interrupt for NMI source
		1 Select clock monitoring interrupt for NMI source
4	NMISRC	Non-Maskable Interrupt Source Selection.
0		Select one of the interrupt sources 0 to 31 for NMI source.

NOTE: The interrupt source which is selected for NMI should be disabled in NVIC to avoid both generation of the normal and NMI interrupts.

5.6.8 SCU_SWRSTR: software reset register

SCU_SWRSTR register is 32-bit size.

SCU_SWRSTR=0x4000_F024

31 30 29 28 27 26 25 24	23 22 21 20 19 18 17 16	15 14 13 12 11 10 9 8	7 6 5 4 3 2 1 0
WTIDKY		Reserved	SWRST
0x0000		0x00	0x00
WO		-	WO

31	WTIDKY	Write Identification Key	
16		When writing, write 0x9EB3 to these bits, or else writing is ignored.	
7	SWRST	Software Reset (System Reset)	
0		0x2D	A software reset will be generated for all peripheral and core.
		Others	No effect

5.6.9 SCU_SRSTVR: system reset validation register

SCU_SRSTVR register is 32-bit size, and accessible in 32/16/8-bit.

SCU_SRSTVR=0x4000_F028

31 30 29 28 27 26 25 24	23 22 21 20 19 18 17 16	15 14 13 12 11 10 9 8	7 6 5 4 3 2 1 0
Reserved			**VALID**
0x000000			**0x55**
-			**RO**

7	VALID	System Reset Validation.	
0		0x55	System reset is O.K.
		Others	A weak system reset. A system reset must be generated by S/W

5.6.10 SCU_WUTCR: wake-up timer control register

Wake-up timer always works on operating mode. This timer gives a stable time for clock generation during Power on and DEEP SLEEP mode release. The main purpose of this timer is periodical tick timer or a wake-up source.

SCU_WUTCR register is 32-bit size, and accessible in 32/16/8-bit.

SCU_WUTCR=0x4000_F02C

31 30 29 28 27 26 25 24	23 22 21 20 19 18 17 16	15 14 13 12 11 10 9 8	7	6 5 4 3 2	1	0
Reserved			**WUTIEN**	**Reserved**	**CNTRLD**	**WUTIFLAG**
0x000000			**0**	**00000**	**0**	**0**
–			**RW**	**I**	**RW**	**RW**

7	WUTIEN	Wake-up Timer Interrupt Enable bit	
		0	Disable wake-up timer interrupt
		1	Enable wake-up timer interrupt
1	CNTRLD	Counter Reload bit	
		0	No effect
		1	Reload data to counter (Automatically cleared to ‘0’ after operation)
0	WUTIFLAG	Wake-up Timer Interrupt Flag bit	
		0	No request occurred
		1	Request occurred. The bit is cleared to ‘0’ when ‘1’ is written.
		NOTE: This bit may not be set to "1b" if the PCLK frequency is slower than the HCLK frequency. So, in order for WUT interrupt to occur normally, the SCU_SCDIVR2.PDIV[1:0] bits must be set to "00b" so that the PCLK frequency is the same as the HCLK frequency.	

5.6.11 SCU_WUTDR: wake-up timer data register

SCU_WUTDR register is 32-bit size and accessible in 32/16/8-bit.

SCU_WUTDR=0x4000_F030

31 30 29 28 27 26 25 24	23 22 21 20 19 18 17 16	15 14 13 12 11 10 9 8	7 6 5 4 3 2 1 0
Reserved	**WUTDATA**		
0x00	**0x001F40**		
–	**RW**		

23 0	WUTDATA	Wake-up Timer Data. The range is 0x000000 to 0xFFFFFF. **NOTES**: 1. When HIRC is system clock, its value should be set to be at least more than 1us. 2. When WDTRC is system clock, its value should be set to be at least more than 100us.

Figure 20. Wake-up Timer Block Diagram

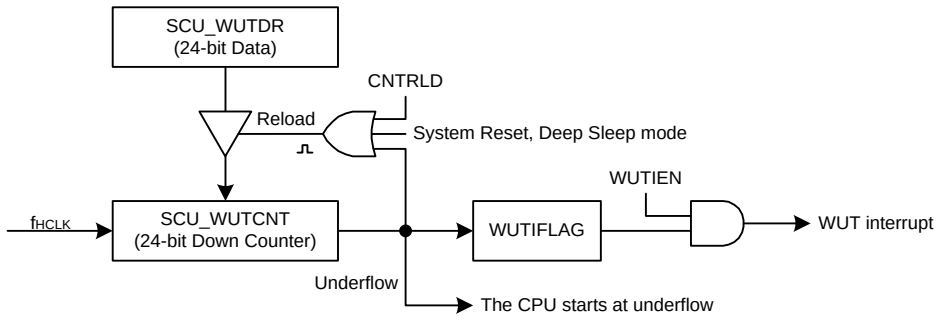

NOTE: The WUTIFLAG bit may not be set to "1b" if the PCLK frequency is slower than the HCLK frequency. So, in order for WUT interrupt to occur normally, the SCU_SCDIVR2.PDIV[1:0] bits must be set to "00b" so that the PCLK frequency is the same as the HCLK frequency.

5.6.12 SCU_HIRCTRM: high frequency internal RC trim register

SCU_HIRCTRM register may be used for user trimming of HIRC by s/w. This register is 32-bit size.

SCU_HIRCTRM=0x4000_F0A8

31	30	29	28	27	26	25	24	23	22	21	20	19	18	17	16	15	14	13	12	11	10	9	8	7	6	5	4	3	2	1	0
WTIDKY																Reserved							CTRMH			FTRMH					
0x0000																x	x	x	x	x	x	x	x	x	x	x	x	x	x	x	x
WO																I	I	I	I	I	I	I	RW			RW					

31 16	WTIDKY	Write Identification Key When writing, write 0xA6B5 to these bits, or else writing is ignored.
8 6	CTRMH	Factory HIRC Coarse Trim. These bits are fixed by manufacturer and read from “Configure Option Page 0” when a system reset occurs. These bits provide a user programmable trimming value on operation. The range is -4 to +3, the CTRMH[2] is sign bit, and the frequency is changed by 2.5MHz step-by-step.
5 0	FTRMH	Factory HIRC Fine Trim. These bits are fixed by manufacturer and read from “Configure Option Page 0” when a system reset occurs. These bits provide a user programmable trimming value on operation. The range is -32 to +31, the FTRMH[5] is sign bit, and the frequency is changed by 80kHz step-by-step.

5.6.13 SCU_WDTRCTRM: Watchdog Timer RC trim register

SCU_WDTRCTRM register may be used for user trimming of WDTRC by s/w. This register is 32-bit size.

SCU_WDTRCTRM=0x4000_F0AC

31 30 29 28 27 26 25 24	23 22 21 20 19 18 17 16	15 14 13 12 11 10 9 8	7 6 5 4	3	2 1 0
WTIDKY		nTRMW	CTRMW	Reserved	FTRMW
0x0000		xx	x x x x	0	x x x
WO		WO	RW	–	RW

31 16	WTIDKY	Write Identification Key When writing, write 0x4C3D to these bits, or else writing is ignored.
15 8	nTRMW	Write Complement Key When writing, write the complement value of LSB(CTRMW+FTRMW), otherwise the write is ignored.
7 4	CTRMW	Factory WDTRC Coarse Trim. These bits are fixed by manufacturer and read from “Configure Option Page 0” when the system resets. These bits provide a user-programmable trimming value on operation. The range is -8 to +7, the CTRMW[3] is sign bit, and the frequency is changed by about 3.7kHz steps.
2 0	FTRMW	Factory WDTRC Fine Trim. These bits are fixed by manufacturer and read from “Configure Option Page 0” when the system resets. These bits provide a user-programmable trimming value on operation. The range is -4 to +3, the FTRMW[2] is sign bit, and the frequency is changed by about 0.7kHz steps.

5.6.14 SCU_SCCR: system clock control register

The A31L22x series has multiple clock sources to generate internal operating clocks. SCU_SCCR register controls such a clock source.

This register is 32-bit size.

SCU_SCCR=0x4000_1800

31 30 29 28 27 26 25 24	23 22 21 20 19 18 17 16	15 14 13 12 11 10 9 8	7 6 5 4 3 2	1	0
WTIDKY		**Reserved**			**MCLKSEL**
0x0000		**0x00**	**0 0 0 0 0 0**	**0**	**0**
WO		**–**	**–**	**RW**	

31	WTIDKY	Write Identification Key	
16		When writing, write 0x570A to these bits, or else writing is ignored.	
1	MCLKSEL	Main Clock Selection, MCLK	
0		00	High frequency Internal RC oscillator (32MHz), HIRC
		01	External main oscillator (2 – 32MHz), XMOSC
		10	External sub oscillator (32.768kHz), XSOSC
		11	Internal watchdog timer RC oscillator (40kHz), WDTRC

NOTES:

1. The MCLKSEL bits will not be changed on selecting the clock which is disabled by SCU_CLKSRCR register.
2. If the MCLKSEL bits are “10” or “11”, the HDIV[2:0] bits of SCU_SCDIVR1 register should be “100” for non-divided system clock.

5.6.15 SCU_CLKSRCR: clock source control register

The A31L22x series has multiple clock sources to generate internal operating clocks. SCU_CLKSRCR register controls each clock source.

This register is 32-bit size.

SCU_CLKSRCR=0x4000_1804

31	30	29	28	27	26	25	24	23	22	21	20	19	18	17	16	15	14	13	12	11	10	9	8	7	6	5	4	3	2	1	0
WTIDKY																Reserved		HIRCSEL		Reserved			XMFRNG	Reserved				WDTRCEN	HIRCEN	XMOSCEN	XSOSCEN
0x0000																0	0	0	0	0	0	0	0	0	0	0	0	1	1	0	0
WO																-	-	RW		-	-	-	RW	-	-	-	-	RW	RW	RW	RW

31 16	WTIDKY	Write Identification Key When writing, write 0xA507 to these bits, or else writing is ignored.
13 12	HIRCSEL	HIRC Frequency Selection bits 00 32MHz HIRC 01 16MHz HIRC 10 8MHz HIRC 11 4MHz HIRC
8	XMFRNG	Main Oscillator Type and Frequency Range Selection bit 0 x-tal for XMOSC, 2 to 16MHz 1 External clock for XMOSC, 2MHz to 32MHz
3	WDTRCEN	WDTRC Enable bit, Watchdog Timer RC oscillator 0 Disable WDTRC 1 Enable WDTRC
2	HIRCEN	HIRC Enable bit, High frequency internal RC oscillator 0 Disable HIRC 1 Enable HIRC
1	XMOSCEN	XMOSC Enable bit, External main oscillator 0 Disable XMOSC 1 Enable XMOSC
0	XSOSCEN	XSOSC Enable bit, External sub oscillator. The bit is cleared to “0b” by the reset of POR/WAKUP3 but retained by the other reset. 0 Disable XSOSC 1 Enable XSOSC

NOTE: The clock selected as a main system clock by SCU_SCCR register will not be changed by the corresponding bit.

5.6.16 SCU_SCDIVR1: system clock divide register 1

SCU_SCDIVR1 register is 32-bit size and accessible in 32/16/8-bit.

SCU_SCDIVR1=0x4000_1808

31 30 29 28 27 26 25 24	23 22 21 20 19 18 17 16	15 14 13 12 11 10 9 8	7	6	5	4	3	2	1	0
Reserved				WLDIV			Reserved	HDIV		
0x000000				0	0	0	0	0	0	0
–				RW			–	RW		

6 4	WLDIV	Clock Divide bits for RTCC, Divider 2 (Refer to Figure 12)	
		000	MCLK÷64
		001	MCLK÷128
		010	MCLK÷256
		011	MCLK÷512
		100	MCLK÷1024
		others	Reserved
2 0	HDIV	Clock Divide bits for HCLK, Divider 0 (Refer to Figure 12)	
		000	MCLK÷16
		001	MCLK÷8
		010	MCLK÷4
		011	MCLK÷2
		100	MCLK÷1
		others	Reserved (MCLK÷1)

NOTES:

1. If the selected MCLK is XSOSC or WDTRC, the HDIV[2:0] bits should be set to “100”.
2. The frequency range of HCLK should be 2.0 to 32[MHz] by s/w while the HIRC is the system clock.
3. After changing the value of HDIV[2:0] bits for system clock speed, a delay 10us is required before changing the value again immediately.

5.6.17 SCU_SCDIVR2: system clock divide register 2

SCU_SCDIVR2 register is 32-bit size and accessible in 32/16/8-bit.

SCU_SCDIVR2=0x4000_180C

31 30 29 28 27 26 25 24	23 22 21 20 19 18 17 16	15 14 13 12 11 10 9 8	7 6	5 4	3 2	1 0
Reserved				**SYSTDIV**	**Reserved**	**PDIV**
0x000000				**0 0**	**0 0**	**0 0**
–				**RW**	**– –**	**RW**

5 4	SYSTDIV	Clock Divide bits for SysTick Timer, Divider 3 (Refer to Figure 12)
		00 HCLK÷1
		01 HCLK÷2
		10 HCLK÷4
		11 HCLK÷8
1 0	PDIV	Clock Divide bits for PCLK, Divider 1 (Refer to Figure 12)
		00 HCLK÷1
		01 HCLK÷2
		10 HCLK÷4
		11 HCLK÷8

NOTE: If the selected MCLK is XSOSC or WDTRC, the PDIV[1:0] should be set to “00”.

5.6.18 SCU_CLKOCR: clock output control register

The A31L22x series can drive the clock from a selected clock (CLKOS) with a dedicated post divider.

SCU_CLKOCR register is 32-bit size and accessible in 32/16/8-bit.

SCU_CLKOCR=0x4000_1810

31 30 29 28 27 26 25 24	23 22 21 20 19 18 17 16	15 14 13 12 11 10 9 8	7	6	5 4 3	2 1 0
Reserved			CLKOEN	POLSEL	CLKODIV	CLKOS
0x000000			0	0	0 0 0	0 0 0
–			RW	RW	RW	RW

7	CLKOEN	Clock Output Enable bit	
		0	Disable clock output
		1	Enable clock output
6	POLSEL	Clock Output Polarity Selection bit when disable	
		0	Low level during disable
		1	High level during disable
5 3	CLKODIV	Output Clock Divide bits, Divider 4 (Refer to Figure 12)	
		000	“Selected clock”÷1
		001	“Selected clock”÷2
		010	“Selected clock”÷4
		011	“Selected clock”÷8
		100	“Selected clock”÷16
		101	“Selected clock”÷32
		110	“Selected clock”÷64
		111	“Selected clock”÷128
2 0	CLKOS	Clock Output Selection bits	
		000	MCLK
		001	WDTRC
		010	HIRC
		011	HCLK
		100	PCLK
		others	Reserved (None)

5.6.19 SCU_CMONCR: clock monitoring control register

Internal clock can be monitored by using internal WDTRC for security purpose.

SCU_CMONCR register is 32-bit size and accessible in 32/16/8-bit.

SCU_CMONCR=0x4000_1814

31 30 29 28 27 26 25 24	23 22 21 20 19 18 17 16	15 14 13 12 11 10 9 8	7	6	5	4	3	2	1	0
Reserved			**MONEN**	**MACTS**		**Reserved**	**MONFLAG**	**NMINTFG**	**MONCS**	
0x000000			**0**	**0**	**0**	**0**	**0**	**0**	**0**	**0**
–			**RW**	**RW**		**-**	**RW**	**RW**	**RW**	

7	MONEN	Clock Output Enable bit
		0 Disable clock monitoring
		1 Enable clock monitoring
		NOTE: When this bit is reset to ‘0’, the block clears the 4/7-bit counter, inFLAG, and flags.
6 5	MACTS	Clock Monitoring Action Selection bits
		00 No action by clock monitoring, but flags will be set/cleared on condition
		01 Reset generation by clock monitoring
		10 The system clock will be changed to the WDTRC regardless of MCLKSEL[1:0] bits of system clock control register (SCU_SCCR) only when the MCLK is selected for monitoring.
		11 Not used
3	MONFLAG	Clock Monitoring Result Flag bit
		0 The clock under monitoring is not ready.
		1 The clock under monitoring is ready. This bit is cleared to ‘0’ when ‘1’ is written.
2	NMINTFG	Clock Monitoring Interrupt Flag bit (only when the MCLK is selected for monitoring)
		0 No request occurred
		1 Request occurred. The bit is cleared to ‘0’ when ‘1’ is written.
		NOTE: When the bit is set, the system clock must be switched to WDTRC by S/W.
1 0	MONCS	Monitored Clock Selection bits
		00 MCLK
		01 HIRC
		10 XMOSC
		11 XSOSC

NOTES:

1. The block should be enabled after disable to clear the internal status for new clock monitoring.
2. This block must be disabled by S/W before entering DEEP SLEEP mode.
3. When the “clock monitoring” function is disabled by S/W, the following sequence is required.
   - First, the MACTS bits should be cleared to “00b”.
   - Second, the MONEN bit must be cleared to “0b”.

Figure 21. Clock Monitoring Circuit Diagram

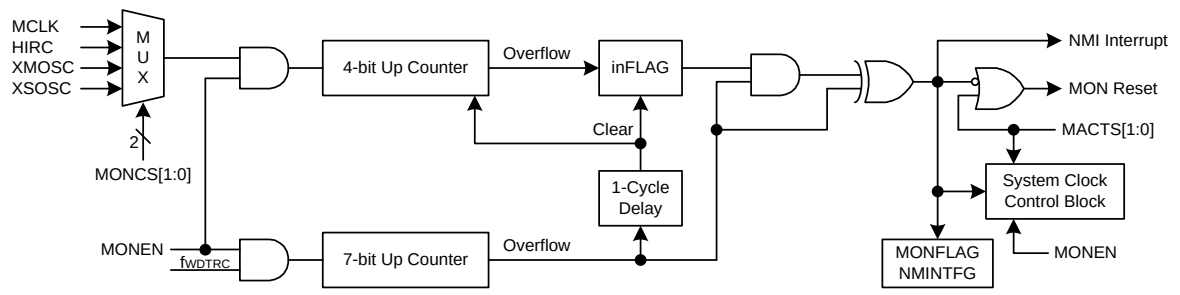

NOTE: WDTRC should be enabled to use this block since it is the watch clock for monitoring.

5.6.20 SCU_PPCLKEN1: peripheral clock enable register 1

To use a certain peripheral unit, its clock should be activated by writing ‘1’ to the corresponding bit in SCU_PPCLKEN1/SCU_PPCLKEN2 register. Until enabling the clock, the peripheral does not operate properly. To stop the clock of the peripheral unit, write ‘0’ to the corresponding bit in the SCU_PPCLKEN1/PPCLKEN2 register.

SCU_PPCLKEN1 register is 32-bit size and accessible in 32/16/8-bit.

SCU_PPCLKEN1=0x4000_1820

31	30	29	28	27	26	25	24	23	22	21	20	19	18	17	16	15	14	13	12	11	10	9	8	7	6	5	4	3	2	1	0
T60CLKE	T50CLKE	Reserved				T43CLKE	T42CLKE	T41CLKE	T40CLKE	Reserved							TSCLKE	Reserved									PECLKE	PDCLKE	PCCLKE	Reserved	PACLKE
0	0	0	0	0	0	0	0	0	0	0	0	0	0	0	0	0	0	0	0	0	0	0	0	0	0	0	0	0	0	0	0
RW	RW	-	-	-	-	RW	RW	RW	RW	-	-	-	-	-	-	-	RW	-	-	-	-	-	-	-	-	-	RW	RW	RW	-	RW

31	T60CLKE	TIMER60 clock enable
30	T50CLKE	TIMER50 clock enable
25	T43CLKE	TIMER43 clock enable
24	T42CLKE	TIMER42 clock enable
23	T41CLKE	TIMER41 clock enable
22	T40CLKE	TIMER40 clock enable
14	TSCLKE	Temperature Sensor clock enable
4	PECLKE	Port E clock enable
3	PDCLKE	Port D clock enable
2	PCCLKE	Port C clock enable
0	PACLKE	Port A clock enable

NOTE: The peripheral registers may not be read/written by software when the peripheral clock is disabled.

5.6.21 SCU_PPCLKEN2: peripheral clock enable register 2

SCU_PPCLKEN2 register is 32-bit size and accessible in 32/16/8-bit.

SCU_PPCLKEN2=0x4000_1824

31	30	29	28	27	26	25	24	23	22	21	20	19	18	17	16	15	14	13	12	11	10	9	8	7	6	5	4	3	2	1	0
Reserved			CMP1CLKE	CMP0CLKE	Reserved					SPI1CLKE	Reserved	FMCLKE	LVICLKE	WDTCLKE	Reserved	LPUT0CLKE	Reserved		CRCLKE	RTCCLKE	ADCLKE	Reserved			I2C0CLKE	Reserved			UT0CLKE	Reserved	UST10CLKE
0	0	0	0	0	0	0	0	0	0	0	0	0	0	1	0	0	0	0	0	0	0	0	0	0	0	0	0	0	0	0	0
-	-	-	RW	RW	-	-	-	-	-	RW	-	RW	RW	RW	-	RW	-	-	RW	RW	RW	-	-	-	RW	-	-	-	RW	-	RW

28	CMP1CLKE	Comparator 1 clock enable
27	CMP0CLKE	Comparator 0 clock enable
21	SPI1CLKE	SPI 1 clock enable
19	FMCLKE	Flash Memory Control clock enable. Ignored during Flash operation.
18	LVICLKE	LVI (Low Voltage Indicator) clock enable
17	WDTCLKE	WDT (Watchdog Timer) clock enable. The WDTRC won't be disabled if the clock is enabled by watchdog timer configuration register (CONF_WDTCNFIG) in "Configure Option Page 1"
15	LPUT0CLKE	Low Power UART 0 clock enable
12	CRCLKE	CRC (Cyclic Redundancy Check) clock enable
11	RTCCLKE	Real Time Clock/Calendar clock enable. The bit is cleared to "0b" by the reset of POR/WAKUP3 but retained by the other reset.
10	ADCLKE	ADC (Analog to Digital Converter) clock enable
6	I2C0CLKE	I2C0 (Inter-integrated Circuit) clock enable
2	UT0CLKE	UART0 clock enable
0	UST10CLKE	USART10 clock enable

NOTE: The peripheral registers may not be read/written by software when the peripheral clock is disabled.

5.6.22 SCU_PPCLKSR: peripheral clock selection register

SCU_PPCLKSR register is 32-bit size and accessible in 32/16/8-bit.

SCU_PPCLKSR=0x4000_1840

31	30	29	28	27	26	25	24	23	22	21	20	19	18	17	16	15	14	13	12	11	10	9	8	7	6	5	4	3	2	1	0
Reserved						T50CLK		Reserved												LPUT0CLK		RTCCLK		Reserved							WDTCLK
0	0	0	0	0	0	0	0	0	0	0	0	0	0	0	0	0	0	0	0	0	0	0	0	0	0	0	0	0	0	0	0
-	-	-	-	-	-	RW	RW	-	-	-	-	-	-	-	-	-	-	-	-	RW	RW	RW	RW	-	-	-	-	-	-	-	RW

25 24	T50CLK	Timer 50 Clock Selection.	
		00	PCLK clock
		01	WDTRC clock
		10	HIRC clock
		11	XSOSC clock
11 10	LPUT0CLK	Low Power UART 0 Clock Selection.	
		00	PCLK clock
		01	HIRC clock
		10	XSOSC clock
		11	Reserved
9 8	RTCCLK	Real Time Clock/Calendar Clock Selection. The bits are cleared to “00b” by the reset of POR/WAKUP3 but retained by the other reset.	
		00	Low level (RTC stuck)
		01	XSOSC clock
		10	WDTRC clock
		11	A clock of the MCLK which is divided by divider 2
0	WDTCLK	Watchdog Timer Clock Selection.	
		0	WDTRC clock
		1	PCLK clock

5.6.23 SCU_PPRST1: peripheral reset register 1

SCU_PPRST1/PPRST2 register can make a peripheral reset. If a specific bit in this register is set to ‘1’, the peripheral corresponded with this bit occurs a reset event and the registers of the peripheral are initialized with reset values.

SCU_PPRST1 register is 32-bit size and accessible in 32/16/8-bit.

SCU_PPRST1=0x4000_1860

31	30	29	28	27	26	25	24	23	22	21	20	19	18	17	16	15	14	13	12	11	10	9	8	7	6	5	4	3	2	1	0
T60RST	T50RST	Reserved				T43RST	T42RST	T41RST	T40RST	Reserved							TSRST	Reserved									PERST	PDRST	PCRST	Reserved	PARST
0	0	0	0	0	0	0	0	0	0	0	0	0	0	0	0	0	0	0	0	0	0	0	0	0	0	0	0	0	0	0	0
RW	RW	-	-	-	-	RW	RW	RW	RW	-	-	-	-	-	-	-	RW	-	-	-	-	-	-	-	-	-	RW	RW	RW	-	RW

31	T60RST	Timer 60 Reset bit	
		0	No effect
		1	Reset Timer 60, Cleared by software
30	T50RST	Timer 50 Reset bit	
		0	No effect
		1	Reset Timer 50, Cleared by software
25	T43RST	Timer 43 Reset bit	
		0	No effect
		1	Reset Timer 43, Cleared by software
24	T42RST	Timer 42 Reset bit	
		0	No effect
		1	Reset Timer 42, Cleared by software
23	T41RST	Timer 41 Reset bit	
		0	No effect
		1	Reset Timer 41, Cleared by software
22	T40RST	Timer 40 Reset bit	
		0	No effect
		1	Reset Timer 40, Cleared by software
14	TSRST	Temperature Sensor Reset bit	
		0	No effect
		1	Reset Temperature Sensor, Cleared by software
4	PERST	Port E Reset bit	
		0	No effect
		1	Reset Port E, Cleared by software
3	PDRST	Port D Reset bit	
		0	No effect
		1	Reset Port D, Cleared by software
2	PCRST	Port C Reset bit	
		0	No effect
		1	Reset Port C, Cleared by software
0	PARST	Port A Reset bit	
		0	No effect
		1	Reset Port A, Cleared by software

5.6.24 SCU_PPRST2: peripheral reset register 2

SCU_PPRST2 register is 32-bit size and accessible in 32/16/8-bit.

SCU_PPRST2=0x4000_1864

31	30	29	28	27	26	25	24	23	22	21	20	19	18	17	16	15	14	13	12	11	10	9	8	7	6	5	4	3	2	1	0
Reserved			CMP1RST	CMP0RST	Reserved					SPI1RST	Reserved	FMCRST	LVIRST	Reserved		LPUT0RST	Reserved		CRRST	RTCRST	ADRST	Reserved		I2C0RST	Reserved				UT0RST	Reserved	UST10RST
0	0	0	0	0	0	0	0	0	0	0	0	0	0	0	0	0	0	0	0	0	0	0	0	0	0	0	0	0	0	0	0
-	-	-	RW	RW	-	-	-	-	-	RW	-	RW	RW	-	-	RW	-	-	RW	RW	RW	-	-	-	RW	-	-	-	RW	-	RW

28	CMP1RST	Comparator 1 Reset bit
		0 No effect
		1 Reset Comparator 1, Cleared by software
27	CMP0RST	Comparator 0 Reset bit
		0 No effect
		1 Reset Comparator 0, Cleared by software
21	SPI1RST	SPI1 Reset bit
		0 No effect
		1 Reset SPI1, Cleared by software
19	FMCRST	FMC (Flash Memory Control) Reset bit. Ignored during flash operation.
		0 No effect
		1 Reset flash memory control, Cleared by software.
18	LVIRST	LVI (Low Voltage Indicator) Reset bit
		0 No effect
		1 Reset LVI, Cleared by software
15	LPUT0RST	Low Power UART 0 Reset bit
		0 No effect
		1 Reset LPUART0, Cleared by software
12	CRRST	CRC (Cyclic Redundancy Check) Reset bit
		0 No effect
		1 Reset CRC, Cleared by software
11	RTCRST	RTCC (Real Time Clock and Calendar) Reset bit
		0 No effect
		1 Reset RTCC, Cleared by software
10	ADRST	ADC (Analog to Digital Converter) Reset bit
		0 No effect
		1 Reset ADC, Cleared by software
6	I2C0RST	I2C0 (Inter-integrated Circuit) Reset bit
		0 No effect
		1 Reset I2C0, Cleared by software
2	UT0RST	UART0 Reset bit
		0 No effect
		1 Reset UART0, Cleared by software
0	UST10RST	USART10 Reset bit
		0 No effect
		1 Reset USART10, Cleared by software

5.6.25 SCU_XSOSC: sub oscillator control register

SCU_XSOSC register is used to select driving current of sub oscillator.

SCU_XSOSC register is 32-bit size and accessible in 32/16/8-bit.

SCU_XSOSC=0x4000_1884

31 30 29 28 27 26 25 24	23 22 21 20 19 18 17 16	15 14 13 12 11 10 9 8	7	6	5	4	3	2	1	0
Reserved			Reserved		ISET_I			Reserved		
0x000000			0	0	1	1	1	0	0	0
-			-	-	RW	RW	RW	-	-	-

5 3	ISET_I	Sub Oscillator Driving Current Selection.	
		000	Reserved (3rd level driving current)
		001	Reserved (3rd level driving current)
		010	3rd level driving current
		011	4th level driving current
		100	5th level driving current
		101	6th level driving current
		110	7th level driving current
		111	The highest driving current

NOTES:

1. The “111b” should be set when the sub oscillator is started by s/w and the value should be kept during sub oscillator stabilization.
2. After sub oscillator stabilization, the ISET_I bits of SCU_XSOSC register may be changed to a lower value in order to reduce the current consumption due to the sub oscillator.

5.6.26 SCU_LVICR: low voltage indicator control register

SCU_LVICR register is 32-bit size and accessible in 32/16/8-bit.

SCU_LVICR=0x4000_5100

31 30 29 28 27 26 25 24	23 22 21 20 19 18 17 16	15 14 13 12 11 10 9 8	7	6	5	4	3	2	1	0
Reserved			LVIEN	Reserved	LVINTEN	LVIFLAG	Reserved	LVIVS		
0x000000			0	0	0	0	0	0	0	0
–			RW	-	RW	RW	-	RW	RW	RW

7	LVIEN	LVI Enable.	
		0	Disable low voltage indicator.
		1	Enable low voltage indicator.
5	LVINTEN	LVI Interrupt Enable.	
		0	Disable low voltage indicator interrupt.
		1	Enable low voltage indicator interrupt.
4	LVIFLAG	LVI Interrupt Flag.	
		0	No request occurred.
		1	Request occurred. The bit is cleared to ‘0’ when ‘1’ is written.
2 0	LVIVS	LVI Voltage Selection.	
		000	1.87V
		001	1.87V
		010	2.02V
		011	2.17V
		100	2.32V
		101	2.47V
		110	2.64V
		111	2.78V

Figure 22. LVI Block Diagram

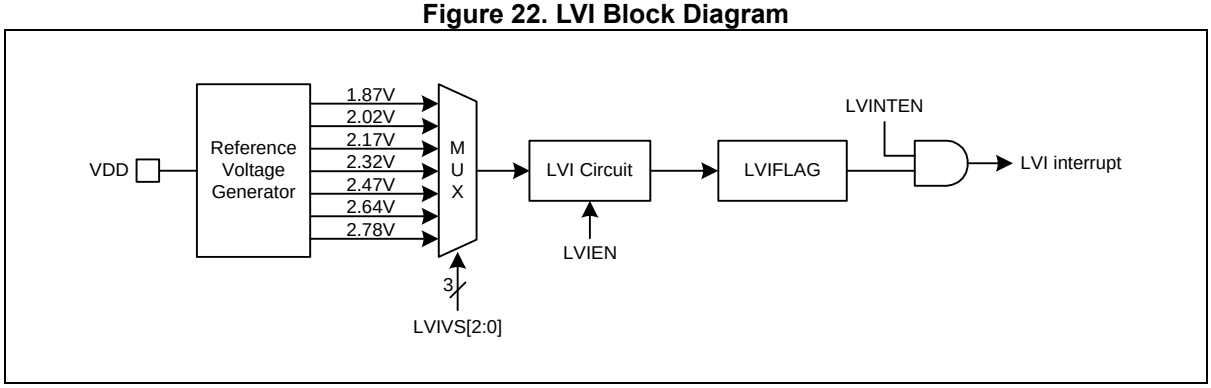

5.6.27 SCU_LVRCR: low voltage reset control register

SCU_LVRCR register is 32-bit size and accessible in 32/16/8-bit.

SCU_LVRCR=0x4000_5104

31 30 29 28 27 26 25 24	23 22 21 20 19 18 17 16	15 14 13 12 11 10 9 8	7 6 5 4 3 2 1 0
Reserved			**LVREN**
0x000000			**0x00**
–			**RW**

7 0	LVREN	LVR Enable. These bits are cleared to 0x00 by POR/WAKUP3 only and retained by other reset signals.	
		0x55	Disable low voltage reset.
		Others	Enable low voltage reset.

Figure 23. LVR Block Diagram

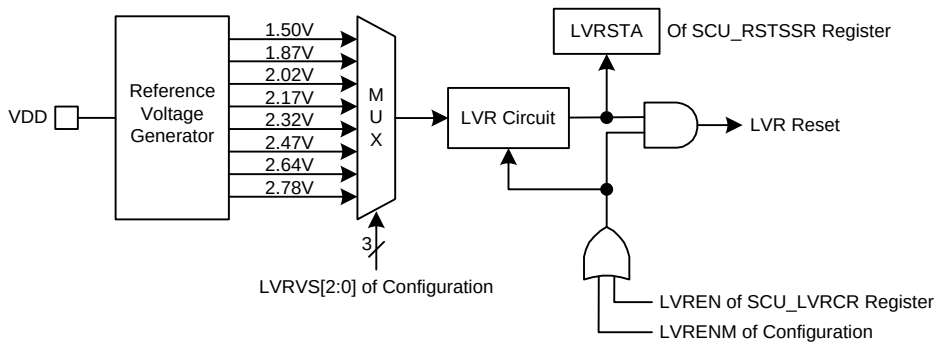

NOTE: Voltage level of LVR is set by the low voltage reset configuration register (CONF_LVRCNFIG) in the Configure Option Page 1.

6 Power Management Unit (PMU)

The A31L22x series has a built-in Power Management Unit (PMU), which manages the internal power supply of the system control and peripheral parts and a wake-up time from SLEEP and DEEP SLEEP modes.

This PMU has 32-byte sized backup registers to retain data during DEEP SLEEP modes except DEEP SLEEP mode 3 (SHUT DOWN mode).

6.1 PMU block diagram

Figure 24. PMU Block Diagram

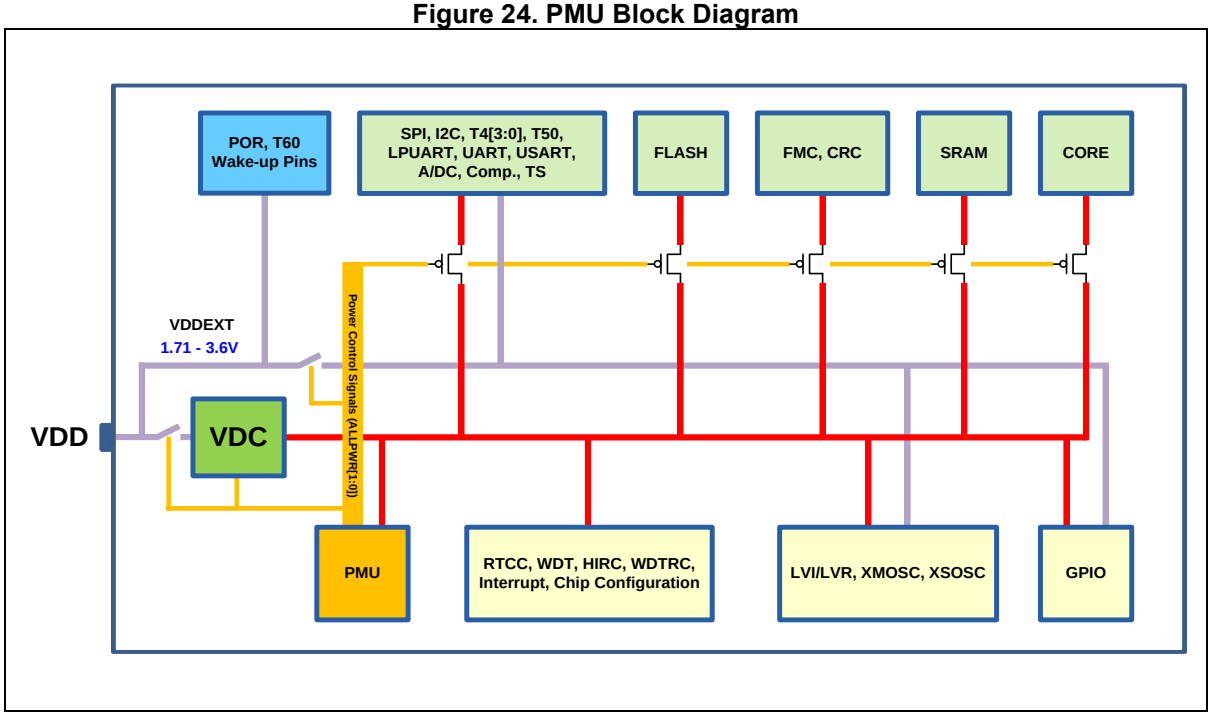

6.2 Functional table on current mode

Table 20. Functional Table on Current Mode

IP	Main Run (IDD1)	Main Sleep (IDD2)	Sub Run (IDD3)	Sub Sleep (IDD4)	Deep Sleep Mode (ALLPWR = x)		
					0 (IDD5)	2 (IDD7)	3 (IDD8)
CPU	O	X	O	X	X	Power off	Power off
FLASH	O	X	O	X	X	Power off	Power off
SRAM	O	X	O	X	X	Power off	Power off
Back-up Reg.	O	X	O	X	X	X	Power off
PMU	O	O	O	O	O	O	Power off
FMC	OPT	X	OPT	X	X	Power off	Power off
CRC	OPT	X	OPT	X	X	Power off	Power off
POR	O	O	O	O	O	O	O
LVR/LVI	OPT	OPT	OPT	OPT	OPT	OPT	Power off
GPIO	O	O	O	O	O	X	Power off
Wakeup pins	X	X	X	X	X	OPT	OPT
SCU	O	O	O	O	O	O	Power off
SPI	OPT	OPT	OPT	OPT	X	Power off	Power off
I2C	OPT	OPT	OPT	OPT	X	Power off	Power off
USART	OPT	OPT	OPT	OPT	OPT	Power off	Power off
UART	OPT	OPT	OPT	OPT	X	Power off	Power off
LPUART	OPT	OPT	OPT	OPT	OPT	Power off	Power off
SysTick	OPT	OPT	OPT	OPT	X	Power off	Power off
T40 – T43	OPT	OPT	OPT	OPT	X	Power off	Power off
T50	OPT	OPT	OPT	OPT	OPT	Power off	Power off
T60 (100Hz)	OPT	OPT	OPT	OPT	OPT	OPT	OPT
WDT	OPT	OPT	OPT	OPT	OPT	OPT	Power off
WUT	O	O	O	O	X	X	Power off
A/DC	OPT	X	X	X	X	Power off	Power off
Comparator	OPT	OPT	OPT	OPT	OPT	Power off	Power off
TS	OPT	OPT	X	X	X	Power off	Power off
RTCC	OPT	OPT	OPT	OPT	OPT	OPT	Power off
HIRC	O	O	OPT	X	X	X	Power off
WDTRC	OPT	OPT	OPT	OPT	OPT	OPT	Power off
XMOSC	OPT	OPT	OPT	X	X	X	Power off
XSOSC	OPT	OPT	OPT	OPT	OPT	OPT	Power off

NOTES:

1. O: Enable, X: Must be disabled (Retention), Opt: Optional (A function can be disabled/enabled by s/w)
2. It can be woken up from SLEEP and DEEP SLEEP modes by an interrupt source of the optional peripherals.
3. When wake-up in deep sleep mode 3 (shutdown), if the BOOT(PD5) pin is low level, it enters boot mode, so it must be set to high level to prevent unintentional entry into boot mode.

6.3 Wake-up time table

Table 21. Wake-up Time Table

Parameter	Symbol	Conditions	Typ	Max	Unit
Wake-up from main sleep	t_{WUMS}	HCLK=32MHz HIRC, Included stabilization	3	6	us
Wake-up from sub sleep	t_{WUSS}	HCLK=40kHz WDTRC	440	600	
Wake-up from deep sleep	t_{WUDS0}	HCLK=32MHz HIRC, Included stabilization PMU_PWRCR.ALLPWR=0	5	8	
	t_{WUDS2}	HCLK=32MHz HIRC, PMU_PWRCR.ALLPWR=2 A CPU reset will occur when wake-up.	5	8	
	t_{WUDS3}	HCLK=32MHz HIRC, PMU_PWRCR.ALLPWR=3 A system reset will occur when wake-up.	8.5	9.8	ms

NOTES:

1. A wake-up source will generate a CPU reset after maximum 8usec when the system is in DEEP SLEEP mode 2 with PMU_PWRCR.ALLPWR=0x2.
2. A wake-up source will generate a system reset after maximum 9.8ms when the system is in DEEP SLEEP mode 3 (Shutdown) with PMU_PWRCR.ALLPWR=0x3. This is called a WAKUP3 reset, and it resets the system in the same way as a POR reset. So, to prevent entering boot mode, care must be taken to ensure that the BOOT(PD5) pin is set to high level.

6.4 Registers

Base address and register map of PMU are shown in Table 22 and Table 23.

Table 22. Base Address of PMU

Name	Base address
PMU	0x4000_1900

Table 23. PMU Register Map

Name	Offset	Type	Description	Reset Value
PMU_PWRCR	0x0000	RW	Power Management control register	0x00000000
PMU_PWRSR	0x0008	RW	Power Management Status Register	0x00000000
PMU_APUPDCR	0x0010	RW	Power Port A Pull-up/down Control Register	0x00000000
PMU_CPUPDCR	0x0018	RW	Power Port C Pull-up/down Control Register	0x00000000
PMU_DPUPDCR	0x001C	RW	Power Port D Pull-up/down Control Register	0x00000000
PMU_EPUPDCR	0x0020	RW	Power Port E Pull-up/down Control Register	0x00000000
PMU_BKR0 to 31	0x0040 to 0x005F	RW	Back-up registers 0 to 31	POR: Unknown Shutdown: Unknown Others: retained

6.4.1 PMU_PWRCR: power management control register

PMU_PWRCR register is used to manage power shut-off of system and peripherals except always-on region.

PMU_PWRCR register is 32-bit size and accessible in 32/16/8-bit.

PMU_PWRCR=0x4000_1900

31	30	29	28	27	26	25	24	23	22	21	20	19	18	17	16	15	14	13	12	11	10	9	8	7	6	5	4	3	2	1	0
WTIDKY																ALLPWR		Reserved			WKUP1	WKUP0	FLASHPWR	Reserved							
0x0000																0	0	0	0	0	0	0	0	0	0	0	0	0	0	0	0
WO																RW	RW	-	RW	RW	RW	RW	RW	-	-	-	-	-	-	-	-

31 16	WTIDKY	Write Identification Key When writing, write 0x5A3C to these bits, or else writing is ignored
15 14	ALLPWR	All System and Peripheral Except Always-on Region Power Control 00 DEEP SLEEP mode 0, can be waked-up by optional and enabled peripherals 01 Not used 10 DEEP SLEEP mode 2, can be waked-up by optional peripherals and wakeup pins 11 DEEP SLEEP mode 3 (Shutdown), can be waked-up by T60 and wakeup pins **NOTE**: These bits are automatically cleared to “00b” by wake-up signal.
9+x	WKUPx	Wake-up function control bit(when the ALLPWR bits are not “00b”), x: 0 to 1 WKUP[1:0]: [PA2:PA0] 0 Disable wake-up function from DEEP SLEEP mode. 1 Enable wake-up function from DEEP SLEEP mode **NOTES**: 1. The WKUPx pin should be configured as input mode by s/w. 2. The pin is forced in rising edge wake-up pin regardless of interrupt registers. 3. After wake-up, Check the real state of the pin.
8	FLASHPWR	Flash Memory Power Control 0 Power on 1 Power off **NOTE**: If this bit is set to “1b”, the Flash memory is immediately turned off. The bit can be written only during the code is operating in SRAM. The Flash memory has 2usec power-on time. The s/w should wait at least 2usec before Flash memory access after writing “0b” to the bit for power-up Flash memory.
7 0	-	Reserved. This value should be set to 0. Otherwise, a malfunction may occur.

6.4.2 PMU_PWRSR: power management status register

PMU_PWRSR register is 32-bit size and accessible in 32/16/8-bit.

PMU_PWRSR=0x4000_1908

31 30 29 28 27 26 25 24	23 22 21 20 19 18 17 16	15 14 13 12 11 10 9 8	7 6 5 4	3	2	1 0
Reserved				WAKUPST3	WAKUPST2	Reserved
0x0000000				x	x	00
–				RW	RW	–

3	WAKUPST3	Wake-up Reset Status 3 bit. A system reset will occur and this bit is set when the system wakes up from DEEP SLEEP mode 3 (PMU_PWRCR.ALLPWR = 3, Shutdown).
		0 Not detected.
		1 Wake-up reset is detected, This bit is cleared to ‘0’ when write ‘1’.
2	WAKUPST2	Wake-up Reset Status 2 bit. A core reset will occur and this bit is set when the system wakes up from DEEP SLEEP mode 2 (PMU_PWRCR.ALLPWR = 2).
		0 Not detected.
		1 Wake-up reset is detected, This bit is cleared to ‘0’ when write ‘1’.

NOTE: The WAKUPST2 and WAKUPST3 bit is cleared to “0b” by a power-on reset but are retained at the other reset.

6.4.3 PMU_APUPDCR: power port A pull-up/down control register

PMU_APUPDCR register is 32-bit size and accessible in 32/16/8-bit.

PMU_APUPDCR=0x4000_1910

31 30 29 28 27 26 25 24	23 22 21 20 19 18 17 16	15 14	13 12	11 10	9 8	7 6	5 4	3 2	1 0
Reserved		APUPD7	APUPD6	APUPD5	APUPD4	APUPD3	APUPD2	APUPD1	APUPD0
0x0000		00	00	00	00	00	00	00	00
–		RW	RW	RW	RW	RW	RW	RW	RW

2x+1 2x	APUPDx	PA[x] Pull-up/down control bits (when the ALLPWR bits are “11b”), x: 0 to 7	
		00	Disable the PA[x]’s pull-up/down resistors
		01	Enable the PA[x]’s pull-up resistor
		10	Enable the PA[x]’s pull-down resistor
		11	Reserved

NOTE: The PMU_APUPDCR register may be used to not make a floating state when DEEP SLEEP mode 3.

6.4.4 PMU_CPUPDCR: power port C pull-up/down control register

PMU_CPUPDCR register is 32-bit size and accessible in 32/16/8-bit.

PMU_CPUPDCR=0x4000_1918

31 30 29 28 27 26 25 24	23 22 21 20 19 18 17 16	15 14	13 12	11 10	9 8	7 6 5 4 3 2 1 0
Reserved			CPUPD6	CPUPD5	Reserved	
0x0000		00	00	00	00	0x00
–		–	RW	RW	–	–

2x+1 2x	CPUPDx	PC[x] Pull-up/down control bits (when the ALLPWR bits are “11b”), x: 5 and 6	
		00	Disable the PC[x]’s pull-up/down resistors
		01	Enable the PC[x]’s pull-up resistor
		10	Enable the PC[x]’s pull-down resistor
		11	Reserved

NOTE: The PMU_CPUPDCR register may be used to not make a floating state when DEEP SLEEP mode 3.

6.4.5 PMU_DPUPDCR: power port D pull-up/down control register

PMU_DPUPDCR register is 32-bit size and accessible in 32/16/8-bit.

PMU_DPUPDCR=0x4000_191C

31 30 29 28 27 26 25 24	23 22 21 20 19 18 17 16	15 14 13 12	11 10	9 8	7 6	5 4	3 2	1 0
Reserved			DPUPD5	DPUPD4	DPUPD3	Reserved		
0x00000			00	00	00	00	00	00
–			RW	RW	RW	–	–	–

2x+1	DPUPDx	PD[x] Pull-up/down control bits (when the ALLPWR bits are “11b”), x: 3 to 5	
2x		00	Disable the PD[x]’s pull-up/down resistors
		01	Enable the PD[x]’s pull-up resistor
		10	Enable the PD[x]’s pull-down resistor
		11	Reserved

NOTE: The PMU_DPUPDCR register may be used to not make a floating state when DEEP SLEEP mode 3.

6.4.6 PMU_EPUPDCR: power port E pull-up/down control register

PMU_EPUPDCR register is 32-bit size and accessible in 32/16/8-bit.

PMU_EPUPDCR=0x4000_1920

31 30 29 28 27 26 25 24	23 22 21 20 19 18 17 16	15 14 13 12 11 10 9 8	7 6	5 4	3 2	1 0
Reserved			EPUPD3	EPUPD2	EPUPD1	EPUPD0
0x000000			00	00	00	00
–			RW	RW	RW	RW

2x+1	EPUPDx	PE[x] Pull-up/down control bits (when the ALLPWR bits are “11b”), x: 0 to 3	
2x		00	Disable the PE[x]’s pull-up/down resistors
		01	Enable the PE[x]’s pull-up resistor
		10	Enable the PE[x]’s pull-down resistor
		11	Reserved

NOTE: The PMU_EPUPDCR register may be used to not make a floating state when DEEP SLEEP mode 3.

6.4.7 PMU_BKRx: back-up register x (x = 0 to 31)

PMU_BKRx register is 8-bit size and accessible in 32/16/8-bit (x = 0 to 31).

PMU_BKRx=0x4000_1940 to 0x4000_195F

31	30	29	28	27	26	25	24	23	22	21	20	19	18	17	16	15	14	13	12	11	10	9	8	7	6	5	4	3	2	1	0
BACKUP																															
Unknown by POR/shutdown mode, and Retained by others																															
RW																															

31 0	BACKUP	Back-up Data bits. This register is used for data back-up on power off mode except of shutdown mode.

7 Port Control Unit (PCU) and GPIO

Port Control Unit (PCU) configures and controls external I/Os as shown below:

- It configures direction of an external signal of each pin.
- It sets Interrupt trigger mode for each pin.
- The PCU sets internal pull-up/down register control and open drain control.

Most pins, except for dedicated function pins, can be used as General Purpose I/O (GPIO) ports. GPIO block controls the GPIO as shown below:

- Output signal level (H/L) select
- External interrupt interface
- Pull-up/down enable or disable

7.1 PCU and GPIO block diagrams

Figure 25. PCU Block Diagram

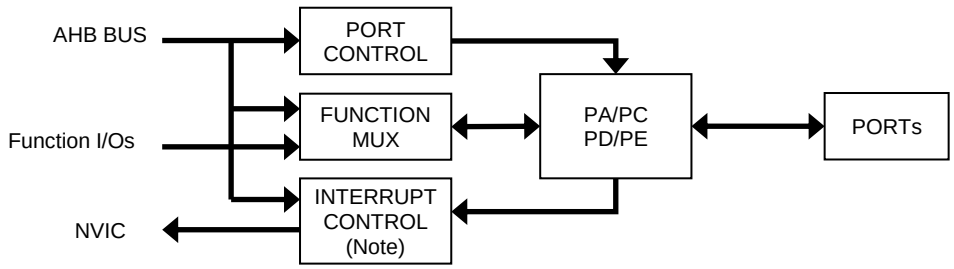

NOTE: Refer to the section3.2 Interrupt controller.

Figure 26. GPIO Block Diagram

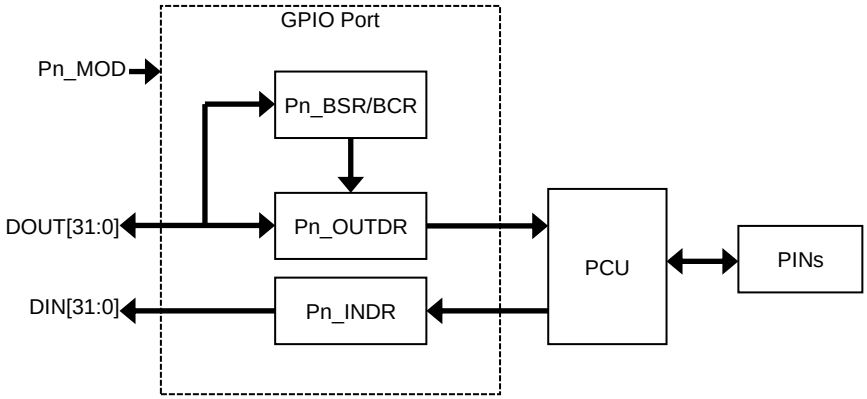

7.2 I/O port block diagram

Figure 27. I/O Port Block Diagram (General Purpose I/O Pins)

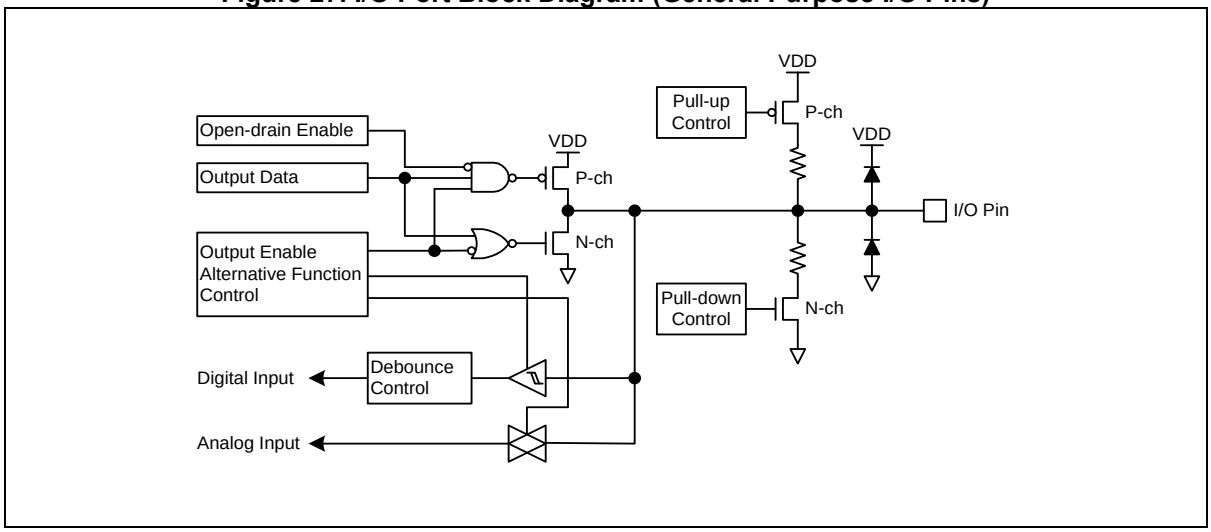

Figure 28. I/O Port Block Diagram (5V Tolerant I/O)

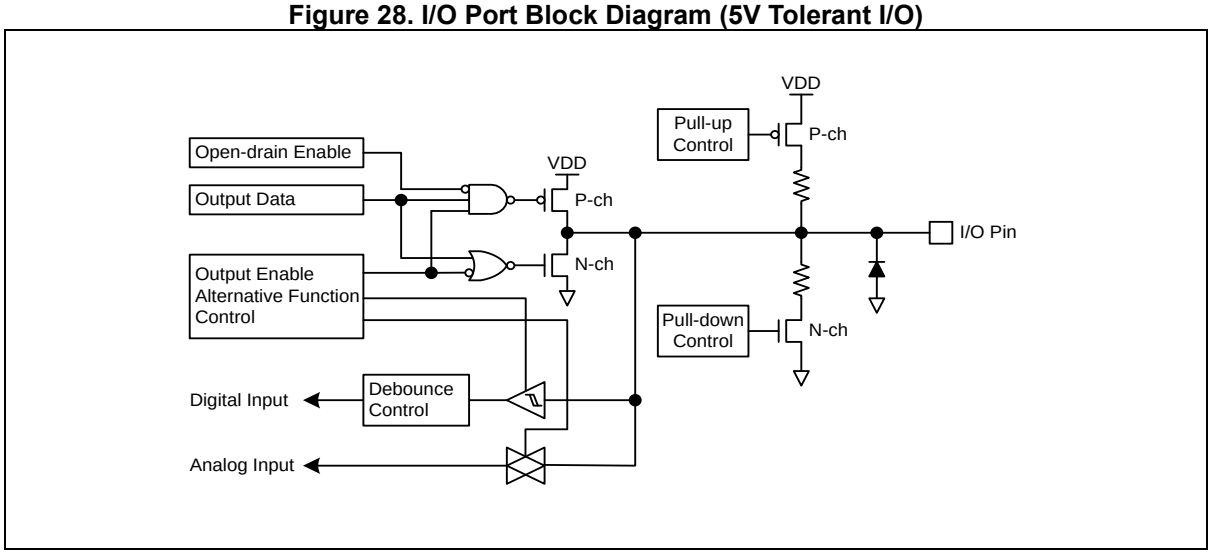

7.3 Pin multiplexing

GPIO pins support alternative functions. Table 24 shows pin multiplexing information.

Table 24. GPIO Alternative Functions

PORT	PIN	FUNCTION							
		AF0	AF1	AF2	AF3	AF4	AF5	AF6	AF7
PA	0	T40OUTA	T40INP	–	–	AN0	CP0N0	CP0OUT	–
	1	T40OUTB	EC40	–	SS10	AN1	CP0P0	–	–
	2	T41OUTA	T41INP	TXD10	MOSI10	AN2	CP1N0	CP1OUT	LPTXD0
	3	T41OUTB	EC41	RXD10	MISO10	AN3	CP1P0	ADTRG	LPRXD0
	4	T42OUTA	T42INP	SS1	SCK10	AN4	CP0N1	CP1N1	LPDE0
	5	T42OUTB	EC42	–	SCK1	AN5	CP0N2	CP1N2	–
	6	T43OUTA	T43INP	–	MISO1	AN6	–	CP0OUT	–
	7	T43OUTB	EC43	–	MOSI1	AN7	CP1P1	CP1OUT	–
PC	5	SWDIO	–	LPRXD0	MISO1	–	–	–	–
	6	SWCLK	–	LPTXD0	MOSI1	–	–	–	–
PD	3	T50OUT	–	TXD0	–	LPDE0	SCL0	–	–
	4	CLKO	T50INP	RXD0	–	–	SDA0	–	–
	5	BOOT	EC50	RTCOUT	SCK1	–	–	–	–
PE	0	SXIN	–	–	–	–	–	–	–
	1	SXOUT	–	–	–	–	–	–	–
	2	XIN	–	TXD0	–	T40OUTA	T40INP	–	–
	3	XOUT	–	RXD0	–	T40OUTB	EC40	ADTRG	–

NOTE:

1. The SWCLK and SWDIO pins shouldn't be changed as other alternative functions by software during the pins are connected with debugger host.

7.4 Registers

Base address and register map of PCU and GPIO block are shown in Table 25 and Table 26.

Table 25. Base Address of Port

Port name	Address range	Size (bytes)	Description
PA	0x3000 0000 – 0x3000 00FF	256	General Purpose I/O Port A
PC	0x3000 0200 – 0x3000 02FF	256	General Purpose I/O Port C
PD	0x3000 0300 – 0x3000 03FF	256	General Purpose I/O Port D
PE	0x3000 0400 – 0x3000 04FF	256	General Purpose I/O Port E

Table 26. PCU and GPIO Register Map

Name	Offset	Type	Description	Reset Value
Pn_MOD	0x0000	RW	Port n mode register	0x0000FFFF
Pn_TYP	0x0004	RW	Port n output type selection register	0x00000000
Pn_AFSR1	0x0008	RW	Port n alternative function selection register 1	0x00000000
Pn_PUPD	0x0010	RW	Port n pull-up/down resistor selection register	0x00000000
Pn_INDR	0x0014	RO	Port n input data register	0x000000FF
Pn_OUTDR	0x0018	RW	Port n output data register	0x00000000
Pn_BSR	0x001C	WO	Port n output bit set register	0x00000000
Pn_BCR	0x0020	WO	Port n output bit clear register	0x00000000
Pn_OUTDMSK	0x0024	RW	Port n output data mask register	0x00000000
Pn_DBCR	0x0028	RW	Port n debounce control register	0x00000000

NOTE: Where n=A, C, D, and E.

7.4.1 Pn_MOD: port n mode register

Pn_MOD register selects one from input mode and output mode for each port pin. Each pin can be configured as an input pin, an output pin or an Alternative Function pin.

This register is 32-bit size and accessible in 32/16/8-bit. (n = A, C, D, and E).

PA_MOD=0x3000_0000, PC_MOD=0x3000_0200
PD_MOD=0x3000_0300, PE_MOD=0x3000_0400

31 30 29 28 27 26 25 24	23 22 21 20 19 18 17 16	15 14	13 12	11 10	9 8	7 6	5 4	3 2	1 0
Reserved		MODE7	MODE6	MODE5	MODE4	MODE3	MODE2	MODE1	MODE0
0x0000		11	11	11	11	11	11	11	11
–		RW	RW	RW	RW	RW	RW	RW	RW

2x+1	MODEx	Port n Mode Selection bits, x: 0 to 7	
2x		00	Input mode
		01	Output mode
		10	Alternative function mode
		11	Off mode (Both input and output are disabled, and the input value is “1b”)

NOTES:

1. The MODEx bits for PE0 – PE3 won’t be changed during the corresponding clock (XMOSC/XSOSC) is selected as the system clock (MCLK).
2. The MODEx bits for PE[1:0] are set to “11b” by the reset of POR/WAKUP3 but retained by the other reset.
3. The MODEx bits for PC[6:5] and PD5 are set to “10b” for alternative function by reset.
4. PC5: SWDIO, PC6: SWCLK, PD5: BOOT
5. Exceptionally, the MODEx bits for PA[5:4] are set to “00b” for input by a system reset.

7.4.2 Pn_TYP: port n output type selection register

Pn_TYP register selects an output type of a port pin from Push-pull output and Open-drain output.

This register is 32-bit size and accessible in 32/16/8-bit. (n = A, C, D, and E)

PA_TYP=0x3000_0004, PC_TYP=0x3000_0204
PD_TYP=0x3000_0304, PE_TYP=0x3000_0404

31 30 29 28 27 26 25 24	23 22 21 20 19 18 17 16	15 14 13 12 11 10 9 8	7	6	5	4	3	2	1	0
Reserved			TYP7	TYP6	TYP5	TYP4	TYP3	TYP2	TYP1	TYP0
0x000000			0	0	0	0	0	0	0	0
–			RW	RW	RW	RW	RW	RW	RW	RW

x	TYPx	Port n Output Type Selection bit, x: 0 to 7	
		0	Push-pull output
		1	Open-drain output

7.4.3 PA_AFSR1: port A alternative function selection register 1

PA_AFSR1 register must be set properly before using the port. Otherwise, the port may not function properly.

This register is 32-bit size and accessible in 32/16/8-bit.

PA_AFSR1=0x3000_0008

31 30 29 28	27 26 25 24	23 22 21 20	19 18 17 16	15 14 13 12	11 10 9 8	7 6 5 4	3 2 1 0
AFSR7	AFSR6	AFSR5	AFSR4	AFSR3	AFSR2	AFSR1	AFSR0
0000	0000	0000	0000	0000	0000	0000	0000
RW	RW	RW	RW	RW	RW	RW	RW

4x+3	AFSRx	Port A Alternative Function Selection bits, x: 0 to 7	
4x		0000	Alternative Function 0 (AF0)
		0001	Alternative Function 1 (AF1)
		0010	Alternative Function 2 (AF2)
		0011	Alternative Function 3 (AF3)
		0100	Alternative Function 4 (AF4)
		0101	Alternative Function 5 (AF5)
		0110	Alternative Function 6 (AF6)
		0111	Alternative Function 7 (AF7)
		Others	Reserved

Table 27. Functions of PA Port

PORT	PIN	FUNCTION							
		AF0	AF1	AF2	AF3	AF4	AF5	AF6	AF7
PA	0	T40OUTA	T40INP	–	–	AN0	CP0N0	CP0OUT	–
	1	T40OUTB	EC40	–	SS10	AN1	CP0P0	–	–
	2	T41OUTA	T41INP	TXD10	MOSI10	AN2	CP1N0	CP1OUT	LPTXD0
	3	T41OUTB	EC41	RXD10	MISO10	AN3	CP1P0	ADTRG	LPRXD0
	4	T42OUTA	T42INP	SS1	SCK10	AN4	CP0N1	CP1N1	LPDE0
	5	T42OUTB	EC42	–	SCK1	AN5	CP0N2	CP1N2	–
	6	T43OUTA	T43INP	–	MISO1	AN6	–	CP0OUT	–
	7	T43OUTB	EC43	–	MOSI1	AN7	CP1P1	CP1OUT	–

7.4.4 PC_AFSR1: port C alternative function selection register 1

PC_AFSR1 register must be set properly before using the port. Otherwise, the port may not function properly.

This register is 32-bit size and accessible in 32/16/8-bit.

PC_AFSR1=0x3000_0208

31 30 29 28	27 26 25 24	23 22 21 20	19 18 17 16	15 14 13 12	11 10 9 8	7 6 5 4	3 2 1 0
AFSR7	AFSR6	AFSR5	AFSR4	AFSR3	AFSR2	AFSR1	AFSR0
0000	0000	0000	0000	0000	0000	0000	0000
RW	RW	RW	RW	RW	RW	RW	RW

4x+3	AFSRx	Port C Alternative Function Selection bits, x: 0 to 7	
4x		0000	Alternative Function 0 (AF0)
		0001	Alternative Function 1 (AF1)
		0010	Alternative Function 2 (AF2)
		0011	Alternative Function 3 (AF3)
		0100	Alternative Function 4 (AF4)
		0101	Alternative Function 5 (AF5)
		0110	Alternative Function 6 (AF6)
		0111	Alternative Function 7 (AF7)
		Others	Reserved

Table 28. Functions of PC Port

PORT	PIN	FUNCTION							
		AF0	AF1	AF2	AF3	AF4	AF5	AF6	AF7
PC	5	SWDIO	–	LPRXD0	MISO1	–	–	–	–
	6	SWCLK	–	LPTXD0	MOSI1	–	–	–	–

7.4.5 PD_AFSR1: port D alternative function selection register 1

PD_AFSR1 register must be set properly before using the port. Otherwise, the port may not function properly.

This register is 32-bit size and accessible in 32/16/8-bit.

PD_AFSR1=0x3000_0308

31 30 29 28	27 26 25 24	23 22 21 20	19 18 17 16	15 14 13 12	11 10 9 8	7 6 5 4	3 2 1 0
AFSR7	AFSR6	AFSR5	AFSR4	AFSR3	AFSR2	AFSR1	AFSR0
0000	0000	0000	0000	0000	0000	0000	0000
RW	RW	RW	RW	RW	RW	RW	RW

4x+3 4x	AFSRx	Port D Alternative Function Selection bits, x: 0 to 7	
		0000	Alternative Function 0 (AF0)
		0001	Alternative Function 1 (AF1)
		0010	Alternative Function 2 (AF2)
		0011	Alternative Function 3 (AF3)
		0100	Alternative Function 4 (AF4)
		0101	Alternative Function 5 (AF5)
		0110	Alternative Function 6 (AF6)
		0111	Alternative Function 7 (AF7)
		Others	Reserved

Table 29. Functions of PD Port

PORT	PIN	FUNCTION							
		AF0	AF1	AF2	AF3	AF4	AF5	AF6	AF7
PD	3	T50OUT	–	TXD0	–	LPDE0	SCL0	–	–
	4	CLKO	T50INP	RXD0	–	–	SDA0	–	–
	5	BOOT	EC50	RTCOUT	SCK1	–	–	–	–

7.4.6 PE_AFSR1: port E alternative function selection register 1

PE_AFSR1 register must be set properly before using the port. Otherwise, the port may not function properly.

This register is 32-bit size and accessible in 32/16/8-bit.

PE_AFSR1=0x3000_0408

31 30 29 28	27 26 25 24	23 22 21 20	19 18 17 16	15 14 13 12	11 10 9 8	7 6 5 4	3 2 1 0
AFSR7	**AFSR6**	**AFSR5**	**AFSR4**	**AFSR3**	**AFSR2**	**AFSR1**	**AFSR0**
0000	**0000**	**0000**	**0000**	**0000**	**0000**	**0000**	**0000**
RW	**RW**	**RW**	**RW**	**RW**	**RW**	**RW**	**RW**

4x+3	AFSRx	Port E Alternative Function Selection bits, x: 0 to 7	
4x		0000	Alternative Function 0 (AF0)
		0001	Alternative Function 1 (AF1)
		0010	Alternative Function 2 (AF2)
		0011	Alternative Function 3 (AF3)
		0100	Alternative Function 4 (AF4)
		0101	Alternative Function 5 (AF5)
		0110	Alternative Function 6 (AF6)
		0111	Alternative Function 7 (AF7)
		Others	Reserved

NOTE: The AFSRx bits for PE[3:0] won't be changed during the corresponding clock (XMOSC/XSOSC) is selected as the system clock (MCLK).

Table 30. Functions of PE Port

PORT	PIN	FUNCTION							
		AF0	AF1	AF2	AF3	AF4	AF5	AF6	AF7
PE	0	SXIN	–	–	–	–	–	–	–
	1	SXOUT	–	–	–	–	–	–	–
	2	XIN	–	TXD0	–	T40OUTA	T40INP	–	–
	3	XOUT	–	RXD0	–	T40OUTB	EC40	ADTRG	–

7.4.7 Pn_PUPD: port n Pull-up/down resistor selection register

Every pin of the port has an on-chip pull-up/down resistor, which can be configured by Pn_PUPD registers.

This register is 32-bit size and accessible in 32/16/8-bit. (n = A, C, D, and E).

PA_PUPD=0x3000_0010, PC_PUPD=0x3000_0210
PD_PUPD=0x3000_0310, PE_PUPD=0x3000_0410

31 30 29 28 27 26 25 24	23 22 21 20 19 18 17 16	15 14	13 12	11 10	9 8	7 6	5 4	3 2	1 0
Reserved		PUPD7	PUPD6	PUPD5	PUPD4	PUPD3	PUPD2	PUPD1	PUPD0
0x0000		00	00	00	00	00	00	00	00
–		RW	RW	RW	RW	RW	RW	RW	RW

2x+1	PUPDx	Port n Pull-up/down Resistor Selection bits, x: 0 to 7	
2x		00	Disable pull-up/down resistor
		01	Enable pull-up resistor
		10	Enable pull-down resistor
		11	Reserved

NOTES:

1. The pull-up/down resistor of PE[3:0] are automatically disabled regardless of the corresponding PUPDx value if the pins are configured as alternative function pins for x-tal (XIN, XOUT, SXIN, and SXOUT).
2. The PUPDx bits for PC5, PC6, and PD5 are set to “01b”, “10b”, and “01b” for SWDIO/SWCLK/BOOT by reset, respectively.
3. PC5: SWDIO, PC6: SWCLK, PD5: BOOT

7.4.8 Pn_INDR: port n input data register

Each pin level status can be read in the Pn_INDR register. Except for analog input and alternative mode output, the pin level can be detected in the Pn_INDR register.

This register is 32-bit size and accessible in 32/16/8-bit. (n = A, C, D, and E).

PA_INDR=0x3000_0014, PC_INDR=0x3000_0214
PD_INDR=0x3000_0314, PE_INDR=0x3000_0414

31 30 29 28 27 26 25 24	23 22 21 20 19 18 17 16	15 14 13 12 11 10 9 8	7	6	5	4	3	2	1	0
Reserved			INDR7	INDR6	INDR5	INDR4	INDR3	INDR2	INDR1	INDR0
0x000000			1	1	1	1	1	1	1	1
–			RO	RO	RO	RO	RO	RO	RO	RO

x	INDRx	Port n Input Data bit, x: 0 to 7

7.4.9 Pn_OUTDR: port n output data register

When a pin is set as an output in GPIO mode, output level of the pin is defined by Pn_OUTDR registers.

This register is 32-bit size and accessible in 32/16/8-bit. (n = A, C, D, and E).

PA_OUTDR=0x3000_0018, PC_OUTDR=0x3000_0218
PD_OUTDR=0x3000_0318, PE_OUTDR=0x3000_0418

31	30	29	28	27	26	25	24	23	22	21	20	19	18	17	16	15	14	13	12	11	10	9	8	7	6	5	4	3	2	1	0
Reserved																								OUTDR7	OUTDR6	OUTDR5	OUTDR4	OUTDR3	OUTDR2	OUTDR1	OUTDR0
0x000000																								0	0	0	0	0	0	0	0
–																								RW	RW	RW	RW	RW	RW	RW	RW

x	OUTDRx	Port n Output Data bit, x: 0 to 7. The OUTDR bits can be individually set/cleared by writing to the Pn_BSR/Pn_BCR register.

7.4.10 Pn_BSR: port n output bit set register

Pn_BSR are used for controlling each bit of the Pn_OUTDR register. Writing a ‘1’ into the specific bit position will set a corresponding bit of Pn_OUTDR to ‘1’. Writing ‘0’ in the register has no effect.

This register is 32-bit size and accessible in 32/16/8-bit. (n = A, C, D, and E)

PA_BSR=0x3000_001C, PC_BSR=0x3000_021C
PD_BSR=0x3000_031C, PE_BSR=0x3000_041C

31	30	29	28	27	26	25	24	23	22	21	20	19	18	17	16	15	14	13	12	11	10	9	8	7	6	5	4	3	2	1	0
Reserved																								BSR7	BSR6	BSR5	BSR4	BSR3	BSR2	BSR1	BSR0
0x000000																								0	0	0	0	0	0	0	0
–																								WO	WO	WO	WO	WO	WO	WO	WO

x	BSRx	Port n Output Set bit, x: 0 to 7. These bits are always read to 0x00.	
		0	No effect
		1	Set the corresponding OUTDRx bit (Automatically cleared to 0)

7.4.11 Pn_BCR: port n output bit clear register

Pn_BCR are used for controlling each bit of Pn_OUTDR register. Writing a ‘1’ into the specific bit will set a corresponding bit of Pn_OUTDR to ‘0’. Writing ‘0’ in this register has no effect.

This register is 32-bit size and accessible in 32/16/8-bit. (n = A, C, D, and E).

PA_BCR=0x3000_0020, PC_BCR=0x3000_0220
PD_BCR=0x3000_0320, PE_BCR=0x3000_0420

31	30	29	28	27	26	25	24	23	22	21	20	19	18	17	16	15	14	13	12	11	10	9	8	7	6	5	4	3	2	1	0
Reserved																								BCR7	BCR6	BCR5	BCR4	BCR3	BCR2	BCR1	BCR0
0x000000																								0	0	0	0	0	0	0	0
–																								WO	WO	WO	WO	WO	WO	WO	WO

x	BCRx	Port n Output Clear bit, x: 0 to 7. These bits are always read to 0x00.	
		0	No effect
		1	Clear the corresponding OUTDRx bit (Automatically cleared to 0)

7.4.12 Pn_OUTDMSK: port n output data mask register

Pn_OUTDMSK are used for protecting each bit of Pn_OUTDR register. Writing a ‘1’ into the specific bit will protect a corresponding bit of Pn_OUTDR. Writing ‘0’ in this register is unmask.

This register is 32-bit size and accessible in 32/16/8-bit. (n = A, C, D, and E).

PA_OUTDMSK=0x3000_0024, PC_OUTDMSK=0x3000_0224
PD_OUTDMSK=0x3000_0324, PE_OUTDMSK=0x3000_0424

31	30	29	28	27	26	25	24	23	22	21	20	19	18	17	16	15	14	13	12	11	10	9	8	7	6	5	4	3	2	1	0
Reserved																								OUTDMSK7	OUTDMSK6	OUTDMSK5	OUTDMSK4	OUTDMSK3	OUTDMSK2	OUTDMSK1	OUTDMSK0
0x000000																								0	0	0	0	0	0	0	0
–																								RW	RW	RW	RW	RW	RW	RW	RW

x	OUTDMSKx	Port n Output Data Mask bit, x: 0 to 7.	
		0	Unmask. The corresponding OUTDRx bit can be changed.
		1	Mask. The corresponding OUTDRx bit is protected.

7.4.13 Pn_DBCR: port n debounce control register

This register is 32-bit size and accessible in 32/16/8-bit. (n = A, C, D, and E).

PA_DBCR=0x3000_0028, PC_DBCR=0x3000_0228
PD_DBCR=0x3000_0328, PE_DBCR=0x3000_0428

31 30 29 28 27 26 25 24	23 22 21 20 19	18 17 16	15 14 13 12 11 10 9 8	7	6	5	4	3	2	1	0
Reserved		DBCLK	Reserved	DBEN7	DBEN6	DBEN5	DBEN4	DBEN3	DBEN2	DBEN1	DBEN0
0x00	00000	000	0x00	0	0	0	0	0	0	0	0
–	–	RW	–	RW	RW	RW	RW	RW	RW	RW	RW

18 16	DBCLK	Port n Debounce Filter Sampling Clock Selection	
		000	HCLK/1
		001	HCLK/4
		010	HCLK/16
		011	HCLK/64
		100	HCLK/256
		101	HCLK/1024
		110	Reserved
		111	Reserved
x	DBENx	Port n Debounce Enable bit, x: 0 to 7.	
		0	Disable debounce filter
		1	Enable debounce filter

NOTES:

1. If a level is not detected on an enabled pin three or more times in a row at the sampling clock, the signal is eliminated as noise.
2. The port debounce should be disabled before DEEP SLEEP mode.
3. The debounce of the PD5 (BOOT) Pin will be enabled on system reset.

7.5 Functional description

When input function of an I/O port is used by the Pin Control Register, output function of the I/O port is disabled.

Each port functions differently according to the Alternative Function Selection Register.

The Input Data Register captures current data on the I/O pin or debounced input data at every GPIO clock cycle.

Figure 29. Port Structure Block Diagram

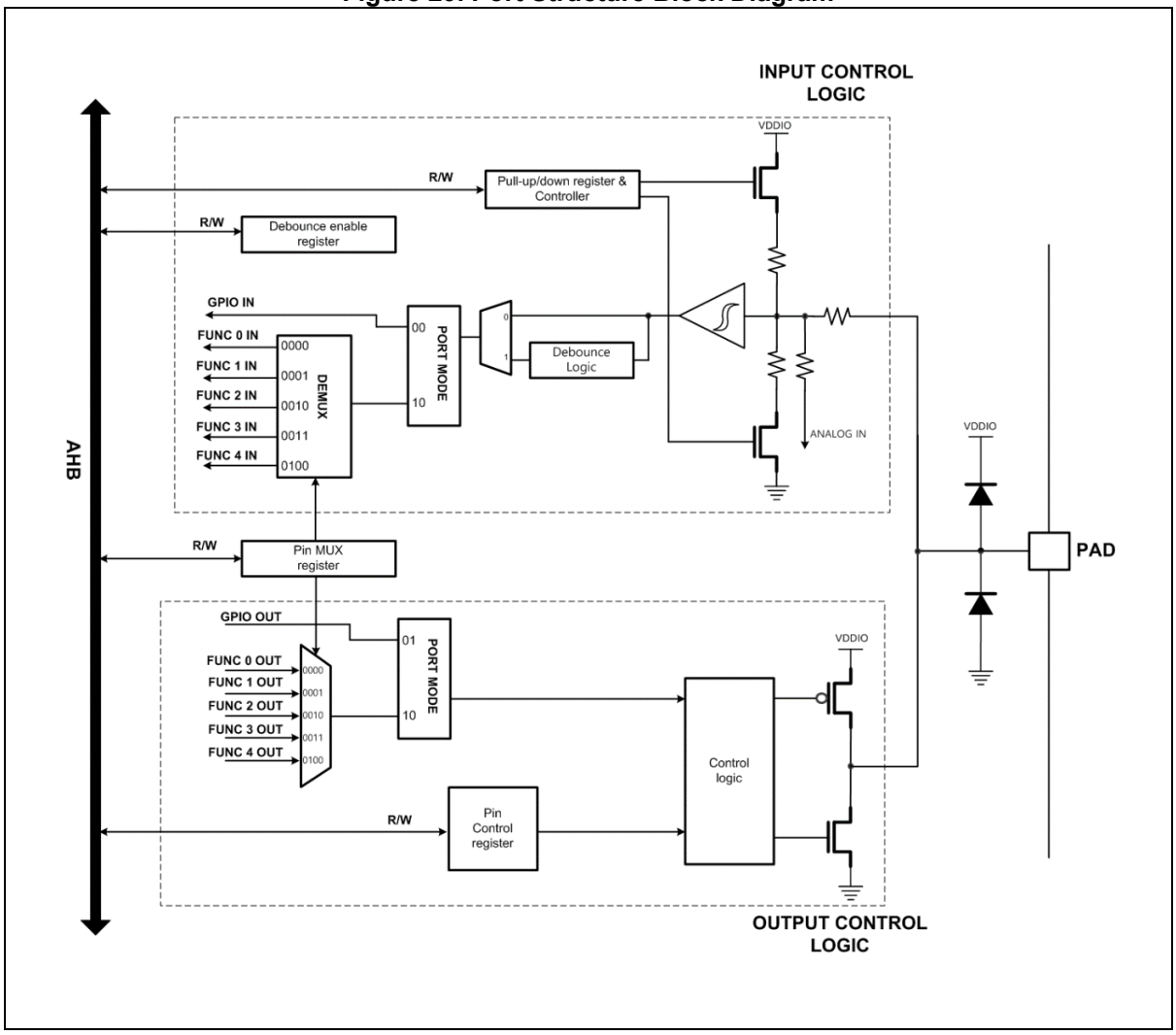

Figure 30. Debounce Function Timing Diagram

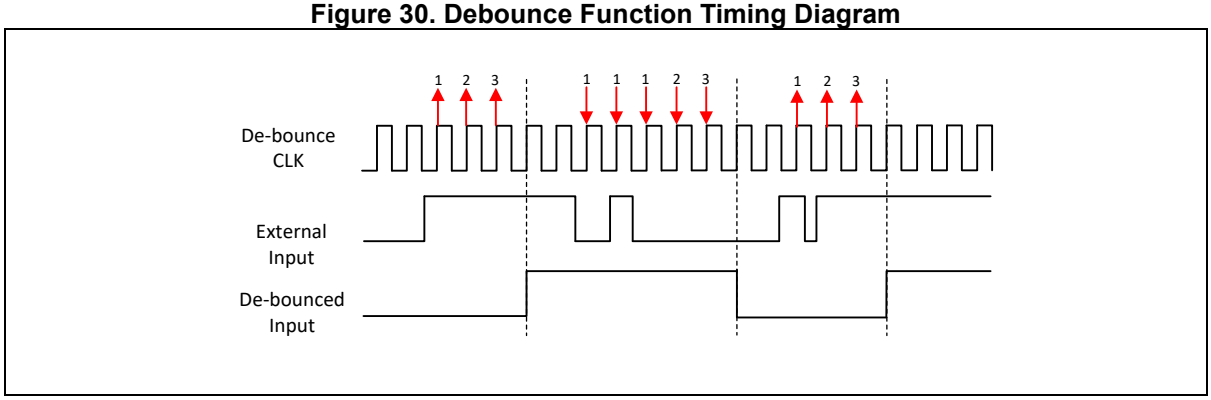

When an I/O port is configured as an output, the value written to the GPIO Output Data Register is output on the I/O Pin. When the Bit Set Register is set, the GPIO Output Data Register is set to High. When the Bit Clr Register is set, the GPIO Output Data Register is set to Low. The Input Data Register captures current data on the I/O pin or debounced input data at every GPIO clock cycle.

Figure 31. GPIO Block Diagram

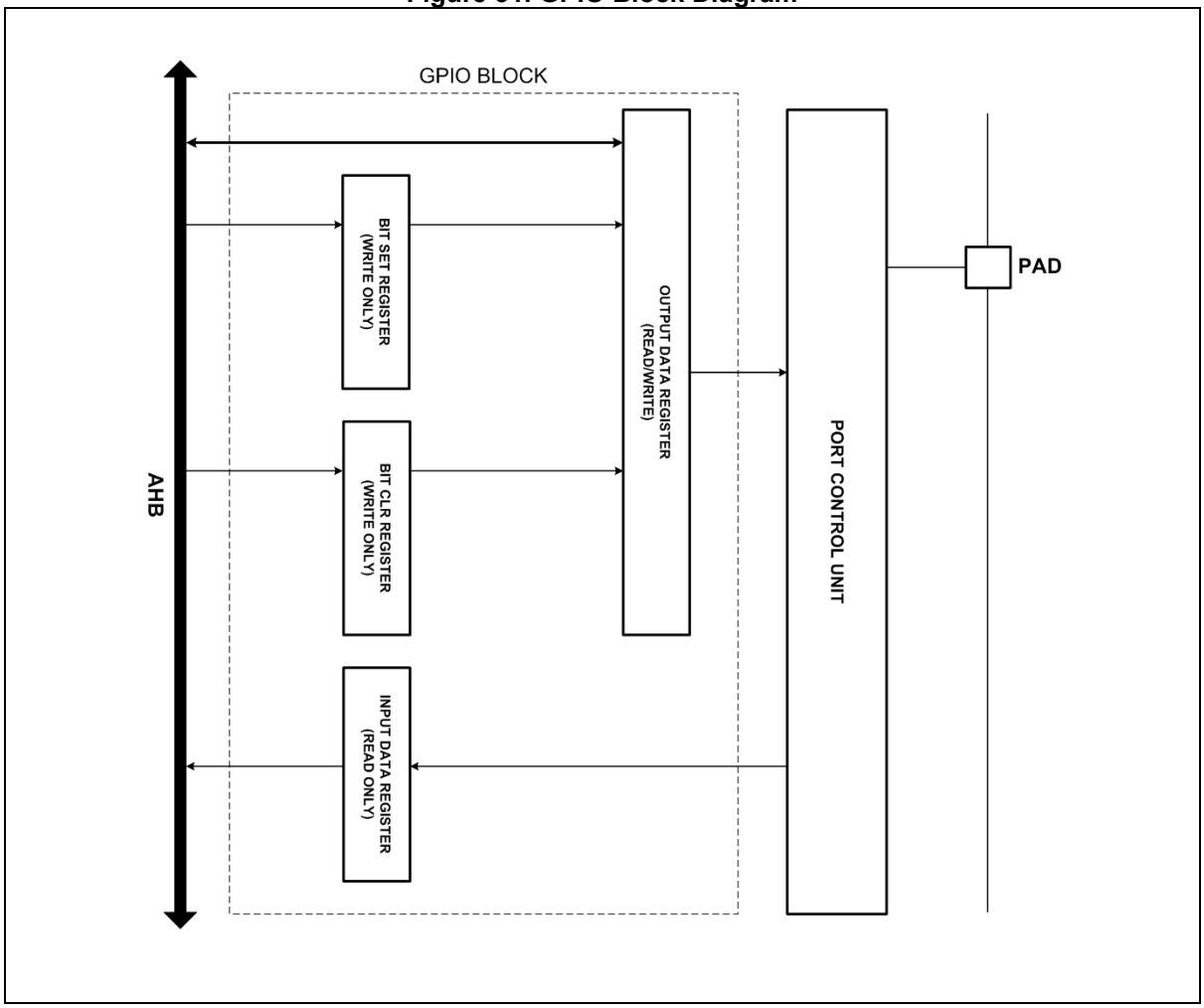

8 Watchdog Timer (WDT)

Watchdog Timer (WDT) rapidly detects CPU malfunctions such as endless loops caused by noise and recovers the CPU to the normal state. WDT signal for malfunction detection can be used as either a CPU reset or an interrupt request.

When the WDT is not being used for malfunction detection, it can be used as a timer to generate interrupts at fixed intervals. When WDT_CNT value reaches WDT_WINDR value, a watchdog interrupt can be generated. The underflow time of the WDT can be set by WDT_DR. If an underflow occurs, an internal reset may be generated. The WDT operates at 40kHz which is the embedded RC oscillator's clock.

The WDT operations are listed in the followings:

- 24-bit down counter (WDT_CNT)
- Select reset or periodic interrupt
- Count clock selection
- Watchdog overflow output signal
- Includes Counter Window function

8.1 WDT block diagram

Figure 32. WDT Block Diagram

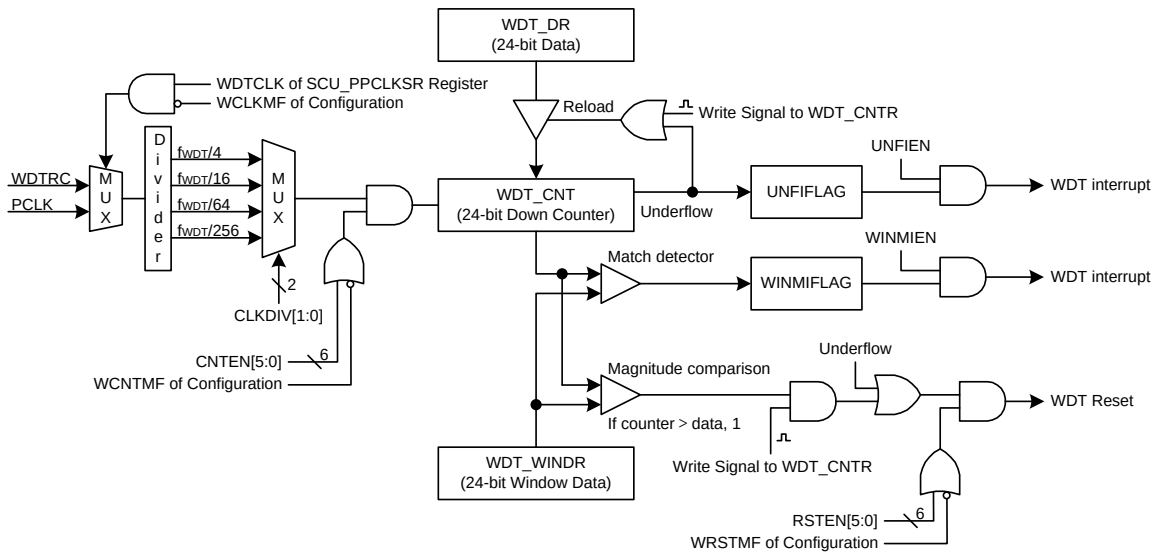

NOTE: When a reload signal is generated, the WDT_DR value is reloaded to WDT_CNT register, after 1-clock delay, with the clock selected by the CLKDIV bits.

8.2 Registers

Base address and register map of WDT are shown in Table 31 and Table 32.

Table 31. Base Address of WDT

Name	Base address
WDT	0x4000_1A00

Table 32. WDT Register Map

Name	Offset	Type	Description	Reset value
WDT_CR	0x0000	RW	Watchdog Timer Control Register	0x00000000
WDT_SR	0x0004	RW	Watchdog Timer Status Register	0x00000080
WDT_DR	0x0008	RW	Watchdog Timer Data Register	0x00000FFF
WDT_CNT	0x000C	RO	Watchdog Timer Counter Register	0x00000FFF
WDT_WINDR	0x0010	RW	Watchdog Timer Window Data Register	0x00001FFF
WDT_CNTR	0x0014	WO	Watchdog Timer Counter Reload Register	0x00000000

8.2.1 WDT_CR: Watchdog Timer control register

WDT module should be configured properly before running. The WDT module can reset the system or assert an interrupt signal to the system.

This register is 32-bit size.

WDT_CR=0x4000_1A00

31 30 29 28 27 26 25 24 23 22 21 20 19 18 17 16	15 14 13 12 11 10	9 8 7 6 5 4	3	2	1 0
WTIDKY	**RSTEN**	**CNTEN**	**WINMIEN**	**UNFIEN**	**CLKDIV**
0x0000	**000000**	**000000**	**0**	**0**	**00**
WO	**RW**	**RW**	**RW**	**RW**	**RW**

31 16	WTIDKY	Write Identification Key. When writing, write 0x5A69 to these bits, or else writing is ignored.	
15 10	RSTEN	Watchdog Timer Reset Enable.	
		0x25	Disable watchdog timer reset.
		Others	Enable watchdog timer reset.
9 4	CNTEN	Watchdog Timer Counter Enable.	
		0x1A	Disable watchdog timer counter.
		Others	Enable watchdog timer counter.
3	WINMIEN	Watchdog Timer Window Match Interrupt Enable.	
		0	Disable window data match interrupt.
		1	Enable window data match interrupt.
2	UNFIEN	Watchdog Timer Underflow Interrupt Enable.	
		0	Disable watchdog timer underflow interrupt.
		1	Enable watchdog timer underflow interrupt.
1 0	CLKDIV	Watchdog Timer Clock Divider. The watchdog timer clock is selected by SCU_PPCLKSR[0] bit of clock generation and CONF_WDTCNFIG[2] bit of Configure Option Page 1.	
		00	fWDT/4
		01	fWDT/16
		10	fWDT/64
		11	fWDT/256

8.2.2 WDT_SR: Watchdog Timer status register

WDT_SR register is 32-bit size and accessible in 32/16/8-bit.

WDT_SR=0x4000_1A04

31 30 29 28 27 26 25 24	23 22 21 20 19 18 17 16	15 14 13 12 11 10 9 8	7	6 5 4 3 2	1	0
Reserved			**DBGCNTEN**	**Reserved**	**WINMIFLAG**	**UNFIFLAG**
0x000000			**1**	**00000**	**0**	**0**
–			**RW**	**–**	**RW**	**RW**

7	DBGCNTEN	Watchdog Timer Counter Enable bit when the core is halted in debug mode.
		0 The watchdog timer counter continues operation even if the core is halted.
		1 The watchdog timer counter stops when the core is halted.
		NOTE: This bit is set to ‘1’ by POR/WAKUP3 reset.
1	WINMIFLAG	Watchdog Timer Window Match Interrupt Flag.
		0 No request occurred.
		1 Request occurred. The bit is cleared to ‘0’ when ‘1’ is written.
0	UNFIFLAG	Watchdog Timer Underflow Interrupt Flag.
		0 No request occurred.
		1 Request occurred. The bit is cleared to ‘0’ when ‘1’ is written.

8.2.3 WDT_DR: Watchdog Timer data register

WDT_DR register is used to update WDT_CNT register.

This register is 32-bit size.

WDT_DR=0x4000_1A08

31 30 29 28 27 26 25 24	23 22 21 20 19 18 17 16	15 14 13 12 11 10 9 8	7 6 5 4 3 2 1 0
Reserved	**DATA**		
0x00	**0x000FFF**		
–	**RW**		

23 0	DATA	Watchdog Timer Data. The range is 0x000000 to 0xFFFFFF.
		NOTE: Once any value is written to this data register, the register cannot be changed until system reset.

8.2.4 WDT_CNT: Watchdog Timer counter register

WDT_CNT register represents current count value of the 32-bit down counter. When the counter value reaches 0, an interrupt or a reset will be asserted.

This register is 32-bit size.

WDT_CNT=0x4000_1A0C

31 30 29 28 27 26 25 24	23 22 21 20 19 18 17 16	15 14 13 12 11 10 9 8	7 6 5 4 3 2 1 0
Reserved	**CNT**		
0x00	**0x000FFF**		
–	**RO**		

23 0	CNT	Watchdog Timer Counter

8.2.5 WDT_WINDR: Watchdog Timer window data register

WDT_WINDR register is used to compare to WDT_CNT for WINDOW function.

This register is 32-bit size.

WDT_WINDR=0x4000_1A10

31 30 29 28 27 26 25 24	23 22 21 20 19 18 17 16	15 14 13 12 11 10 9 8	7 6 5 4 3 2 1 0
Reserved	**WDATA**		
0x00	**0x001FFF**		
-	**RW**		

23 0	WDATA	Watchdog Timer Window Data. The range is 0x000000 to 0xFFFFFF.

NOTE: Once any value is written to this window data register, the register cannot be changed until system reset.

8.2.6 WDT_CNTR: Watchdog Timer counter reload register

WDT_CNTR register is used to generate a reload signal. When a reload signal is generated, the WDT_DR value is reloaded to WDT_CNT.

This register is 32-bit size.

WDT_CNTR=0x4000_1A14

31	30	29	28	27	26	25	24	23	22	21	20	19	18	17	16	15	14	13	12	11	10	9	8	7	6	5	4	3	2	1	0
Reserved																								CNTR							
0x000000																								0x00							
-																								WO							

7 0	CNTR	Watchdog Timer Counter Reload bits.	
		0x6A	Reload the WDT_DR value to watchdog timer counter and re-start. (Automatically cleared to “0x00” after operation)
		Others	No effect

8.3 Functional description

Watchdog Timer count is enabled by CNTEN (WDT_CR[9:4]) settings which can be any value other than 0x1A. As the WDT activates, the down counter will start counting from the load value. If the RSTEN (WDT_CR[15:10]) is set as any value other than 0x25, WDT reset would be asserted when the WDT counter value reaches 0 (underflow event) from WDT_DR value.

Before WDT counter reaches 0, software can write 0x6A to WDT_CNTR register in order to reload WDT counter when the counter value is less than or equal to the value of window data register. WDT reset may be asserted if the reload occurs when counter > window data.

8.3.1 Timing diagram

Figure 33. WDT Interrupt and WDT Reset Timing Diagram

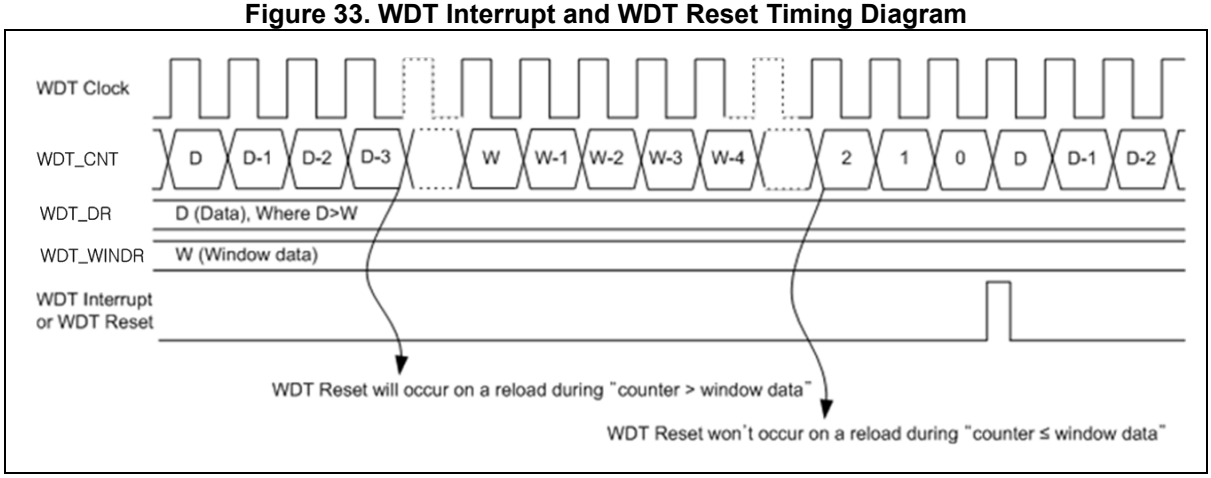

8.3.2 Pre-scale table

The WDT includes a 24-bit down counter with programmable pre-scaler to define different time-out intervals.

Clock sources of the WDT can be WDTRC or PCLK. The PCLK can be selected by setting WDTCLK (SCU_PPCLKSR[0]) to '1'. Then CONF_WDTCNFIG[2] bit of Configure Option Page 1 is cleared to logic '0'.

A WDT counter can be set as a base clock by controlling a 2-bit pre-scaler CLKDIV [1:0] in the WDT_CR register. The maximum pre-scaled value is "clock source frequency/256". The pre-scaled WDT counter clock frequency values are listed in Table 33.

Selectable clock source (40kHz ~ 32MHz) and time-out interval at a single count

Time-out period = (Load Value + 1) * (1/pre-scaled WDT counter clock frequency)

*Time out period (when the Load Value reaches 0, underflow flag is set to '1')

Table 33. Pre-scaled WDT Counter Clock Frequency

Clock source	WDTCLKIN	WDTCLKIN/4	WDTCLKIN/16	WDTCLKIN/64	WDTCLKIN/256
WDTRC	40kHz	10kHz	2.5kHz	0.625kHz	0.156kHz
PCLK	PCLK	PCLK/4	PCLK/16	PCLK/64	PCLK/256

9 Real Timer Clock and Calendar (RTCC)

Real Timer Clock and Calendar (RTCC) has a function for RTC (Real Time Clock) and calendar operations. Internal structure of the RTCC is implemented with the clock source select circuit, second/minute/hour/day/week/month/year counter circuits, alarm circuit, output select circuit, and error correction circuit.

The RTCC is an independent BCD counter. The RTCC circuitry and the related control bits are not reset by a system reset other than POR/WAKUP3.

Main operations of the RTCC are introduced in the following list:

- Calendar with 0.5 seconds, seconds, minutes, hours, day, week, month, and year up to 2099
- Time error correction function
- Alarm function with interrupt
- Wake-up possible from DEEP SLEEP mode

9.1 RTCC block diagram

Figure 34 shows a block diagram of the RTCC block.

Figure 34. RTCC Block Diagram

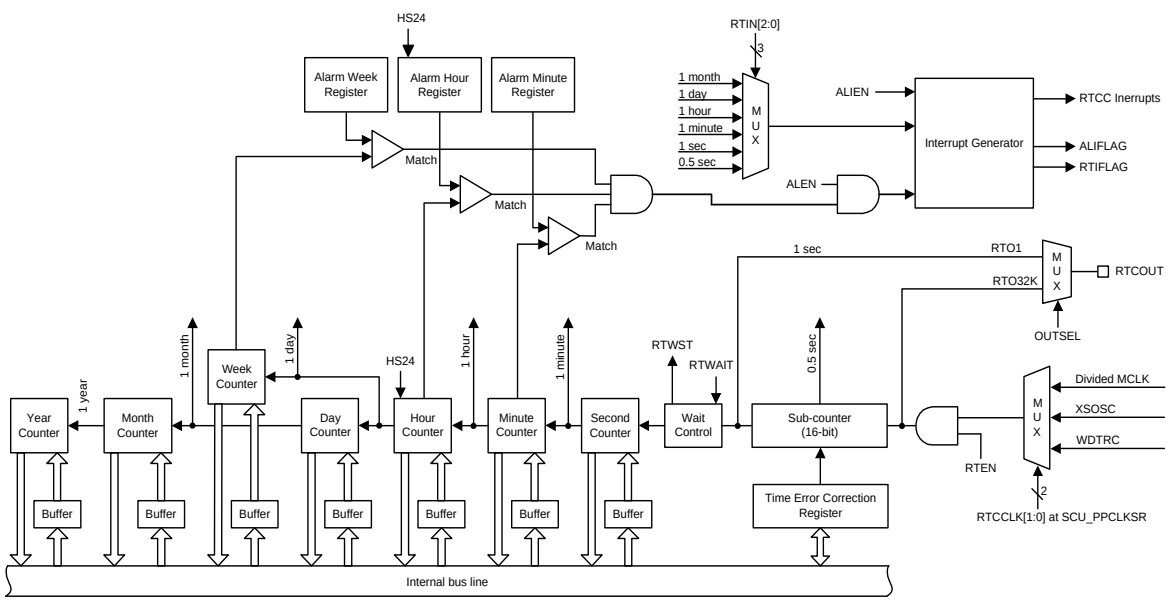

NOTE: Time in the block diagram is based on 32.768 kHz.

9.2 Registers

Base address and register map of the RTCC are shown in Table 34 and Table 35.

Table 34. Base Address of RTCC

Name	Base address
RTCC	0x4000_5200

Table 35. RTCC Register Map

Name	Offset	Type	Description	POR/WAKUP3 Reset value (Retained at the other reset)
RTC_CR	0x0000	RW	RTCC Control Register	0x00000000
RTC_ECR	0x0004	RW	RTCC Time Error Correction Register	0x00000000
RTC_SCNT	0x0008	RO	RTCC Sub-counter Register	0x00000000
RTC_SEC	0x000C	RW	RTCC Second Counter Register	0x00000000
RTC_MIN	0x0010	RW	RTCC Minute Counter Register	0x00000000
RTC_HOUR	0x0014	RW	RTCC Hour Counter Register	0x00000012
RTC_DAY	0x0018	RW	RTCC Day Counter Register	0x00000001
RTC_WEEK	0x001C	RW	RTCC Week Counter Register	0x00000000
RTC_MONTH	0x0020	RW	RTCC Month Counter Register	0x00000001
RTC_YEAR	0x0024	RW	RTCC Year Counter Register	0x00000000
RTC_ALMIN	0x0028	RW	RTCC Alarm Minute Register	0x00000000
RTC_ALHOUR	0x002C	RW	RTCC Alarm Hour Register	0x00000012
RTC_ALWEEK	0x0030	RW	RTCC Alarm Week Register	0x00000000

9.2.1 RTC_CR: RTCC control register

RTC_CR register is 32-bit size and accessible in 32/16/8-bit.

RTC_CR=0x4000_5200

31	30	29	28	27	26	25	24	23	22	21	20	19	18	17	16	15	14	13	12	11	10	9	8	7	6	5	4	3	2	1	0
Reserved																RTEN	RTIN			RTIFLAG	HS24	Reserved	OUTSEL	ALEN	ALIEN	ALIFLAG	Reserved			RTWST	RTWAIT
0x0000																0	0	0	0	0	0	0	0	0	0	0	0	0	0	0	0
–																RW	RW	RW	RW	RW	RW	-	RW	RW	RW	RW	-	-	-	RO	RW

15	RTEN	RTCC Enable.	
		0	RTCC Disable
		1	RTCC Enable
14 12	RTIN	RTCC Interrupt Interval Selection.	
		000	Disable RTCC Interval Interrupt.(NOTE1)
		001	Once per 0.5 sec
		010	Once per 1 sec
		011	Once per 1 min
		100	Once per 1 hour
		101	Once per 1 day
		110	Once per 1 month
		111	Reserved. Value is not changed.
11	RTIFLAG	RTCC Interval Interrupt Flag.	
		0	No request occurred.
		1	Request occurred. The bit is cleared to ‘0’ when ‘1’ is written.
10	HS24	12/24-hour System Selection. (NOTE2)	
		0	12-hour system.
		1	24-hour system.
8	OUTSEL	RTCOUT Selection.	
		0	RTO 1 (1Hz).
		1	RTO 32K (32kHz).
7	ALEN	RTCC Alarm Match Operation Enable. (NOTE3)	
		0	Disable RTCC alarm match operation.
		1	Enable RTCC alarm match operation
6	ALIEN	RTCC Alarm Match Interrupt Enable.	
		0	Disable
		1	Enable
5	ALIFLAG	RTCC Alarm Match Interrupt Flag.	
		0	No request occurred.
		1	Request occurred. The bit is cleared to ‘0’ when ‘1’ is written.
1	RTWST	RTCC Wait Status Flag. (NOTE4)	
		0	Counter is operating.
		1	Mode to read/write counter value.
0	RTWAIT	RTCC Wait Status Flag. (NOTE5)	
		0	Set counter Operation
		1	Stop RTSEC to RTYEAR counters for read/write counter value

NOTES:

1. When changing the values of RTIN[2:0] while the counter operates (RTEN = 1), rewrite the values of RTIN[2:0] after disabling interrupt servicing RTCC Interrupt by using the Interrupt Source Mask Register (INTC_MSK). Furthermore, after rewriting the values of RTIN[2:0], enable interrupt servicing after clearing the RTIFLAG flag.
2. Rewrite the HS24 value after setting RTWAIT (bit 0 of RTC_CR) to 1. If the HS24 value is changed, the values of the RTCC hour counter register (RTC_HOUR) and RTCC alarm hour register (RTC_ALHOUR) change according to the specified time system.
   Table 36. Value of RTC_HOUR/RTC_ALHOUR by HS24 bit shows the displayed time digits.
3. When setting a value to the ALEN bit while the counter operates (RTEN = 1) and ALIEN = 1, rewrite the ALEN bit after disabling interrupt servicing RTCC Interrupt by using Interrupt & Wake-up Source Mask Register (INTC_MSK). Furthermore, clear the ALIFLAG flag after

	rewriting the ALEN bit. When setting each alarm register (ALIEN flag of RTC_CR, the RTC_ALMIN register, the RTC_ALHOUR register, and the RTC_ALWEEK register), set match operation to be invalid (“0”) for the ALEN bit.
4.	This status flag indicates whether the setting of RTWAIT is valid. Before reading or writing the counter value, confirm that the value of this flag is 1.
5.	This bit controls the operation of the counter. Be sure to write “1” to it to read or write the counter value. Because the RTCC sub-counter (RTC_SCNT) continues operation, complete reading or writing of it in 1 second, and clear this bit back to 0. When RTWAIT = 1, it takes up to 2 clocks (RTCC clock) until the counter value can be read or written. If the RTCC sub-counter (RTC_SCNT) overflows when RTWAIT = 1, it counts up after RTWAIT = 0. If the RTCC second counter register (RTC_SEC) is written, however, it does not count up because RTCC sub-counter (RTC_SCNT) is cleared.

9.2.2 RTC_ECR: RTCC time error correction register

RTC_ECR register is 32-bit size and accessible in 32/16/8-bit.

RTC_ECR=0x4000_5204

31 30 29 28 27 26 25 24	23 22 21 20 19 18 17 16	15 14 13 12 11 10 9 8	7	6	5	4	3	2	1	0
Reserved			ECTM	ECSIGN	ECV					
0x000000			0	0	0	0	0	0	0	0
–			RW	RW	RW	RW	RW	RW	RW	RW

7	ECTM	Time Error Correction Timing Selection. (NOTE1)
		0 Corrects time error when the second digits are at 00H, 20H, or 40H (every 20 seconds).
		1 Corrects watch error only when the second digits are at 00H (every 60 seconds).
6	ECSIGN	Time Error Correction Data Sign. (NOTE2~4)
		0 Increases by {(ECV5, ECV4, ECV3, ECV2, ECV1, ECV0) – 1} × 2
		1 Decreases by {(/ECV5, /ECV4, /ECV3, /ECV2, /ECV1, /ECV0) + 1} × 2
5 0	ECV	Time Error Correction Data.

NOTES:

1. Do not write to the RTC_ECR register at the following timing.
   — When ECTM = 0 is set: For a period of SEC = 00H, 20H, 40H
   — When ECTM = 1 is set: For a period of SEC = 00H
2. When (ECSIGN, ECV5, ECV4, ECV3, ECV2, ECV1, ECV0) = (n, 0, 0, 0, 0, 0, n), the watch error is not corrected. (Where n = 0 or 1)
3. /ECV5 to /ECV0 are the inverted values of the corresponding bits (000011 when 111100).
4. Range of correction value: (when ECSIGN = 0) 2, 4, 6, 8, … , 120, 122, 124
   (when ECSIGN = 1) –2, –4, –6, –8, … , –120, –122, –124

9.2.3 RTC_SCNT: RTCC sub counter register

RTC_SCNT register is 32-bit size and accessible in 32/16-bit.

RTC_SCNT=0x4000_5208

31 30 29 28 27 26 25 24	23 22 21 20 19 18 17 16	15 14 13 12 11 10 9 8	7 6 5 4 3 2 1 0
Reserved		**RTCNT**	
0x0000		**0x0000**	
–		**RO**	

15 0	RTCNT	RTCC Sub-counter.

NOTES:

1. When a correction is made by using the RTC_ECR register, the value of RTC_SCNT may become 8000H or more.
2. The RTC_SCNT is also cleared by writing the RTCC second counter register.
3. The value read from this register is not guaranteed if it is read during operation, because a value that is changing is read.

9.2.4 RTC_SEC: RTCC second counter register

RTC_SEC register is 32-bit size and accessible in 32/16/8-bit.

RTC_SEC=0x4000_520C

31 30 29 28 27 26 25 24	23 22 21 20 19 18 17 16	15 14 13 12 11 10 9 8	7	6 5 4 3 2 1 0
Reserved			**Reserved**	**RSEC**
0x000000			**0**	**0 0 0 0 0 0 0**
–			**-**	**RW RW RW RW RW RW RW**

6 0	RSEC	RTCC Second counter.

NOTES:

1. The RTC_SEC register takes a value of 0 to 59 (decimal) and indicates the count value of seconds. It counts up when the RTCC sub-counter overflows.
2. Set a decimal value of 00 to 59 to this register in BCD code. If a value outside this range is tried to be written in the register, the value is ignored.

9.2.5 RTC_MIN: RTCC minute counter register

RTC_MIN register is 32-bit size and accessible in 32/16/8-bit.

RTC_MIN=0x4000_5210

31 30 29 28 27 26 25 24	23 22 21 20 19 18 17 16	15 14 13 12 11 10 9 8	7	6	5	4	3	2	1	0
Reserved			Reserved	RMIN						
0x000000			0	0	0	0	0	0	0	0
–			-	RW	RW	RW	RW	RW	RW	RW

6 0	RMIN	RTCC Minute counter.

NOTES:

1. The RTC_MIN register takes a value of 0 to 59 (decimal) and indicates the count value of minutes. It counts up when the RTCC second counter register overflows.
2. Even if the RTCC second counter register overflows while this register is being written, this register ignores the overflow and is set to the value written.
3. Set a decimal value of 00 to 59 to this register in BCD code. If a value outside this range is tried to be written in the register, the value is ignored.

9.2.6 RTC_HOUR: RTCC hour counter register

RTC_HOUR register is 32-bit size and accessible in 32/16/8-bit.

RTC_HOUR=0x4000_5214

31 30 29 28 27 26 25 24	23 22 21 20 19 18 17 16	15 14 13 12 11 10 9 8	7	6	5	4	3	2	1	0
Reserved			Reserved		RHOUR					
0x000000			0	0	0	1	0	0	1	0
–			-	-	RW	RW	RW	RW	RW	RW

5 0	RHOUR	RTCC Hour counter.

NOTES:

1. The RTC_HOUR register takes a value of 00 to 23 or 01 to 12, 21 to 32 (decimal) and indicates the count value of hours. It counts up when the RTCC minute counter register overflows.
2. Even if the RTCC minute counter register overflows while this register is being written, this register ignores the overflow and is set to the value written. Specify a decimal value of 00 to 23, 01 to 12, or 21 to 32 by using BCD code according to the time system specified using HS24 bit of RTC_CR(RTCC control register). If a value outside this range is tried to be written in the register, the value is ignored.
3. RTHOUR5 bit of RTC_HOUR indicates AM(0)/PM(1) if HS24(RTC_CR[10]) = 0 (if the 12-hour system is selected).

Table 36. Value of RTC_HOUR/RTC_ALHOUR by HS24 bit

24-Hour Display (HS24 bit = 1)		12-Hour Display (HS24 bit = 0)	
Time	**RTC_HOUR Register RTC_ALHOUR Register**	**Time**	**RTC_HOUR Register RTC_ALHOUR Register**
0	00H	0 a.m.	12H
1	01H	1 a.m.	01H
2	02H	2 a.m.	02H
3	03H	3 a.m.	03H
4	04H	4 a.m.	04H
5	05H	5 a.m.	05H
6	06H	6 a.m.	06H
7	07H	7 a.m.	07H
8	08H	8 a.m.	08H
9	09H	9 a.m.	09H
10	10H	10 a.m.	10H
11	11H	11 a.m.	11H
12	12H	0 p.m.	32H
13	13H	1 p.m.	21H
14	14H	2 p.m.	22H
15	15H	3 p.m.	23H
16	16H	4 p.m.	24H
17	17H	5 p.m.	25H
18	18H	6 p.m.	26H
19	19H	7 p.m.	27H
20	20H	8 p.m.	28H
21	21H	9 p.m.	29H
22	22H	10 p.m.	30H
23	23H	11 p.m.	31H

9.2.7 RTC_DAY: RTCC day counter register

RTC_DAY register is 32-bit size and accessible in 32/16/8-bit.

RTC_DAY=0x4000_5218

31	30	29	28	27	26	25	24	23	22	21	20	19	18	17	16	15	14	13	12	11	10	9	8	7	6	5	4	3	2	1	0
Reserved																								Reserved		RDAY					
0x000000																								0	0	0	0	0	0	0	1
–																								–	–	RW	RW	RW	RW	RW	RW

5 0	RDAY	RTCC Day counter.

NOTES:

1. The RTC_DAY register takes a value of 1 to 31 (decimal) and indicates the count value of days. It counts up when the RTCC hour counter register overflows.
2. Even if the RTCC hour counter register overflows while this register is being written, this register ignores the overflow and is set to the value written.
3. Set a decimal value of 01 to 31 to this register in BCD code. If a value outside this range is tried to be written in the register, the value is ignored.
4. The RTC_DAY register counts as follows.
   - 01 to 31 (January, March, May, July, August, October, December)
   - 01 to 30 (April, June, September, November)
   - 01 to 29 (February of leap year)
   - 01 to 28 (February of normal year)

9.2.8 RTC_WEEK: RTCC week counter register

RTC_WEEK register is 32-bit size and accessible in 32/16/8-bit.

RTC_WEEK=0x4000_521C

31	30	29	28	27	26	25	24	23	22	21	20	19	18	17	16	15	14	13	12	11	10	9	8	7	6	5	4	3	2	1	0
Reserved																								Reserved					RWEEK		
0x000000																								0	0	0	0	0	0	0	0
–																								–	–	–	–	–	RW	RW	RW

2 0	RWEEK	RTCC Week counter.	
		000	Sunday
		001	Monday
		010	Tuesday
		011	Wednesday
		100	Thursday
		101	Friday
		110	Saturday
		111	Ignored. Value is not changed

NOTES:

1. The RTC_WEEK register takes a value of 0 to 6 (decimal) and indicates the count value of weekdays. It counts up in synchronization with the RTCC day counter register.
2. Set a decimal value of 00 to 06 to this register in BCD code. If a value outside this range is tried to be written in the register, the value is ignored.
3. Values corresponding to the month count register and day count register are not automatically stored to the RTCC week counter register.

9.2.9 RTC_MONTH: RTCC month counter register

RTC_MONTH register is 32-bit size and accessible in 32/16/8-bit.

RTC_MONTH=0x4000_5220

31	30	29	28	27	26	25	24	23	22	21	20	19	18	17	16	15	14	13	12	11	10	9	8	7	6	5	4	3	2	1	0
Reserved																								Reserved			RMONTH				
0x000000																								0	0	0	0	0	0	0	1
–																								–	–	–	RW	RW	RW	RW	RW

4 0	RMONTH	RTCC Month counter.	

NOTES:

1. The RTC_MONTH register takes a value of 1 to 12 (decimal) and indicates the count value of months. It counts up when the RTCC day counter register overflows.
2. Even if the RTCC day counter register overflows while this register is being written, this register ignores the overflow and is set to the value written.
3. Set a decimal value of 01 to 12 to this register in BCD code. If a value outside this range is tried to be written in the register, the value is ignored.

9.2.10 RTC_YEAR: RTCC year counter register

RTC_YEAR register is 32-bit size and accessible in 32/16/8-bit.

RTC_YEAR=0x4000_5224

31 30 29 28 27 26 25 24	23 22 21 20 19 18 17 16	15 14 13 12 11 10 9 8	7	6	5	4	3	2	1	0
Reserved			RYEAR							
0x000000			0	0	0	0	0	0	0	0
–			RW	RW	RW	RW	RW	RW	RW	RW

7 0	RYEAR	RTCC Year counter.

NOTES:

1. The RTC_YEAR register takes a value of 0 to 99 (decimal) and indicates the count value of years. It counts up when the RTCC month counter register overflows. Values 00, 04, 08, …, 92, and 96 indicate a leap year.
2. Even if the RTCC month counter register overflows while this register is being written, this register ignores the overflow and is set to the value written.
3. Set a decimal value of 00 to 99 to this register in BCD code. If a value outside this range is tried to be written in the register, the value is ignored.

9.2.11 RTC_ALMIN: RTCC alarm minute counter register

RTC_ALMIN register is 32-bit size and accessible in 32/16/8-bit.

RTC_ALMIN=0x4000_5228

31 30 29 28 27 26 25 24	23 22 21 20 19 18 17 16	15 14 13 12 11 10 9 8	7	6	5	4	3	2	1	0
Reserved			Reserved	AMIN						
0x000000			0	0	0	0	0	0	0	0
–			I	RW	RW	RW	RW	RW	RW	RW

6 0	AMIN	RTCC Alarm Minute counter.

NOTE: This register is used to set minutes of alarm. Set a decimal value of 00 to 59 to this register in BCD code. If a value outside this range is tried to be written in the register, the value is ignored.

9.2.12 RTC_ALHOUR: RTCC alarm hour counter register

RTC_ALHOUR register is 32-bit size and accessible in 32/16/8-bit.

RTC_ALHOUR=0x4000_522C

31 30 29 28 27 26 25 24	23 22 21 20 19 18 17 16	15 14 13 12 11 10 9 8	7	6	5	4	3	2	1	0
Reserved			Reserved		AHOUR					
0x000000			0	0	0	1	0	0	1	0
–			–	–	RW	RW	RW	RW	RW	RW

5 0	AHOUR	RTCC Alarm Hour counter.

NOTES:

1. This register is used to set hours of alarm. Specify a decimal value of 00 to 23, 01 to 12, or 21 to 32 by using BCD code according to the time system specified using HS24 bit of RTC_CR(RTCC control register). If a value outside this range is tried to be written in the register, the value is ignored.
2. AHOUR5 bit of RTC_ALHOUR indicates AM(0)/PM(1) if HS24 = 0 (if the 12-hour system is selected).

9.2.13 RTC_ALWEEK: RTCC alarm week counter register

RTC_ALWEEK register is 32-bit size and accessible in 32/16/8-bit.

RTC_ALWEEK=0x4000_5230

31	30	29	28	27	26	25	24	23	22	21	20	19	18	17	16	15	14	13	12	11	10	9	8	7	6	5	4	3	2	1	0
Reserved																								Reserved	AWEEK6	AWEEK5	AWEEK4	AWEEK3	AWEEK2	AWEEK1	AWEEK0
0x000000																								0	0	0	0	0	0	0	0
–																								-	RW	RW	RW	RW	RW	RW	RW

6	AWEEK6	Saturday Alarm Setting
		0 Disable Saturday Alarm
		1 Enable Saturday Alarm
5	AWEEK5	Friday Alarm Setting
		0 Disable Friday Alarm
		1 Enable Friday Alarm
4	AWEEK4	Thursday Alarm Setting
		0 Disable Thursday Alarm
		1 Enable Thursday Alarm
3	AWEEK3	Wednesday Alarm Setting
		0 Disable Wednesday Alarm
		1 Enable Wednesday Alarm
2	AWEEK2	Tuesday Alarm Setting
		0 Disable Tuesday Alarm
		1 Enable Tuesday Alarm
1	AWEEK1	Monday Alarm Setting
		0 Disable Monday Alarm
		1 Enable Monday Alarm
0	AWEEK0	Sunday Alarm Setting
		0 Disable Sunday Alarm
		1 Enable Sunday Alarm

9.3 Functional description

9.3.1 Time error correction

The time of RTCC can be corrected with high accuracy when it is slow or fast, by setting a value to the RTCC time error correction register.
The range of value that can be corrected by using the RTCC time error correction register (RTC_ECR) is shown below.

Table 37. Correctable Range of Time Error

	ECTM = 0 (correction every 20 sec)	**ECTM = 1 (correction every 60 sec)**
Correctable range	–189.2 ppm to 189.2 ppm	–63.1 ppm to 63.1 ppm
Maximum excludes quantization error	± 1.53 ppm	± 0.51 ppm
Minimum resolution	± 3.05 ppm	± 1.02 ppm

NOTE: If a correctable range is –63.1 ppm or lower and 63.1 ppm or higher, set ECTM to 0.

The correction value used when correcting the count value of the RTCC sub-counter register (RTC_SCNT) is calculated by using the following expression.

Set ECTM to 0 when the correction range is −63.1 ppm or less, or 63.1 ppm or more.

- When ECTM = 0, Correction value = Number of correction counts in 1 minute ÷ 3 = (Oscillation frequency ÷ Target frequency − 1) X 32768 X 60 ÷ 3
- When ECTM = 1, Correction value = Number of correction counts in 1 minute = (Oscillation frequency ÷ Target frequency − 1) X 32768 X 60

NOTES:
1. The correction value is 2, 4, 6, 8, … 120, 122, 124 or −2, −4, −6, −8, … −120, −122, −124.
2. The oscillation frequency is the external sub oscillator clock (XSOSC) value. It can be got through the RTCOUT pin. (when the RTC_ECR value is 0x00000000).
3. The target frequency is the frequency resulting after correction performed by using the time error

The correction value is the time error correction value calculated by RTC_ECR[6:0].

- When ECSIGN = 0, Correction value = {(ECV5, ECV4, ECV3, ECV2, ECV1, ECV0) − 1} X 2
- When ECSIGN = 1, Correction value = − {(/ECV5, /ECV4, /ECV3, /ECV2, /ECV1, /ECV0) + 1} X 2

When (ECSIGN, ECV5, ECV4, ECV3, ECV2, ECV1, ECV0) is (x, 0, 0, 0, 0, 0, x), time error correction is not performed. (x = 0 or 1).

/ECV5, /ECV4, /ECV3, /ECV2, /ECV1, /ECV0 are bit-inverted values (000011 when 111100).

9.3.2 Time error correction example 1

Example of correcting from 32772.3 Hz to 32768 Hz (32772.3 Hz − 131.2 ppm)

9.3.2.1 Measuring the oscillation frequency

The oscillation frequency of each product is measured by outputting about 32 kHz from the RTCOUT pin or outputting about 1 Hz from the RTCOUT pin when the time error correction register is set to its initial value (00H).

9.3.2.2 Calculating the correction value

If the target frequency is assumed to be 32768 Hz (32772.3 Hz − 131.2 ppm), the correction range for −131.2 ppm is −63.1 ppm or less, so assume ECTM to be 0.

The expression for calculating the correction value when ECTM is 0 is applied.

Correction value = Number of correction counts in 1 minute ÷ 3

= (Oscillation frequency ÷ Target frequency − 1) X 32768 X 60 ÷ 3

= (32772.3 ÷ 32768 − 1) X 32768 X 60 ÷ 3

= 86

9.3.2.3 Calculating the values to be set to registers

If the correction value is 0 or more (when delaying), assume ECSIGN to be 0.

Calculate (ECV5, ECV4, ECV3, ECV2, ECV1, ECV0) from the correction value.

{ (ECV5, ECV4, ECV3, ECV2, ECV1, ECV0) − 1} X 2 = 86
(ECV5, ECV4, ECV3, ECV2, ECV1, ECV0) = 44
(ECV5, ECV4, ECV3, ECV2, ECV1, ECV0) = (1, 0, 1, 1, 0, 0)

Consequently, when correcting from 32772.3 Hz to 32768 Hz (32772.3 Hz − 131.2 ppm), setting the correction register such that ECTM is 0 and the correction value is 86 (RTC_ECR[6:0] = 0101100) results in 32768 Hz (0ppm).

9.3.3 Time error correction example 2

Example of correcting from 32767.4 Hz to 32768 Hz (32767.4 Hz + 18.3 ppm)

9.3.3.1 Measuring the oscillation frequency

The oscillation frequency of each product is measured by outputting about 32 kHz from the RTCOUT pin or outputting about 1 Hz from the RTCOUT pin when the time error correction register is set to its initial value (00H).

9.3.3.2 Calculating the correction value

Assume the target frequency to be 32768 Hz (32767.4 Hz + 18.3 ppm) and ECTM to be 1.

The expression for calculating the correction value when ECTM is 1 is applied.

Correction value = Number of correction counts in 1 minute

= (Oscillation frequency ÷ Target frequency − 1) X 32768 X 60

= (32767.4 ÷ 32768 − 1) X 32768 X 60

= −36

9.3.3.3 Calculating the values to be set to registers

If the correction value is 0 or less (when quickening), assume ECSIGN to be 1.

Calculate (ECV5, ECV4, ECV3, ECV2, ECV1, ECV0) from the correction value.

− { (/ECV5, /ECV4, /ECV3, /ECV2, /ECV1, /ECV0) + 1} X 2 = −36
(/ECV5, /ECV4, /ECV3, /ECV2, /ECV1, /ECV0) = 17
(/ECV5, /ECV4, /ECV3, /ECV2, /ECV1, /ECV0) = (0, 1, 0, 0, 0, 1)
(ECV5, ECV4, ECV3, ECV2, ECV1, ECV0) = (1, 0, 1, 1, 1, 0)

Consequently, when correcting from 32767.4 Hz to 32768 Hz (32767.4 Hz + 18.3 ppm), setting the correction register such that ECTM is 1 and the correction value is −36 (RTC_ECR[6:0] = 1101110) results in 32768 Hz (0ppm).

10 Timer counter 40/41/42/43

Each of Timer counter 40/41/42/43 is a 16-bit general purpose timer with two outputs. It has an independent 16-bit counter and a dedicated prescaler that feeds counting clock. It supports periodic timer, PWM pulse, one-shot and capture mode.

Main purpose of this timer is to work as a periodical tick timer or to provide a wake-up source. The operations of Timer counter 40/41/42/43 are listed in the followings:

- 12-bit prescaler and 16-bit up-counter
- Interval timer, One-shot timer, Back-to-back, and Capture mode
- Counter sharing function to connect each other
- Synchronous start and clear function

10.1 Timer counter 40/41/42/43 block diagram

Figure 35 shows the block diagram of a timer block unit.

Figure 35. Timer Counter n Block Diagram (n = 40, 41, 42, and 43)

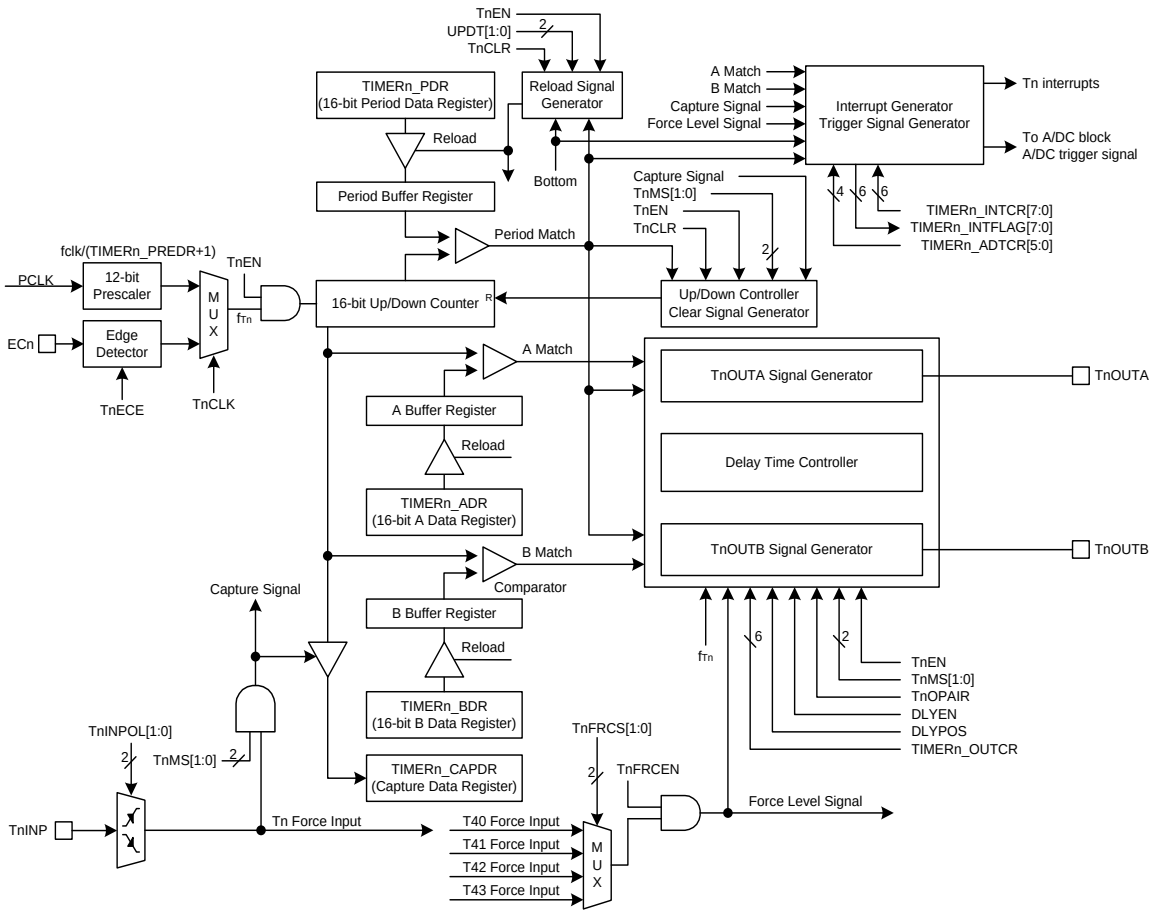

NOTES:

1. Period/A/B match interrupts except for bottom can occur in the interval mode.
2. Period match interrupt only can occur in the capture mode.
3. 16-bit up/down counter in the capture mode is cleared to “0000H” after the counter value is loaded to the TIMERn_CAPDR register at a valid edge.
4. TnEN bit is automatically cleared to logic “0b” after one pulse is generated at a one-shot interval mode.
5. After the TnEN bit is set, the counting of TIMERn_CNT may be delayed 2 clocks or more.
6. High/low width of ECn clock should be longer than PCLK clock period.

10.2 Pin description for timer counter 40/41/42/43

Table 38. Pins and External Signals for Timer Counter n (n = 40, 41, 42, and 43)

Pin name	Type	Description
ECn	I	External clock input
TnINP	I	Capture or force input
TnOUTA	O	Timer A output
TnOUTB	O	Timer B output

10.3 Registers

Base address and register map of the Timer 40/41/42/43 are shown in Table 39 and Table 40.

Table 39. Base Address of Timer 40/41/42/43

Name	Base address	Size	Description
TIMER40	0x4000_2700	128	Timer/Counter 40
TIMER41	0x4000_2780	128	Timer/Counter 41
TIMER42	0x4000_2800	128	Timer/Counter 42
TIMER43	0x4000_2880	128	Timer/Counter 43

Table 40. Timer Register Map (n = 40, 41, 42, and 43)

Name	Offset	Type	Description	Reset value
TIMERn_CR	0x00	RW	Timer/Counter n Control Register	0x00000000
TIMERn_PDR	0x04	RW	Timer/Counter n Period Data Register	0x0000FFFF
TIMERn_ADR	0x08	RW	Timer/Counter n A Data Register	0x0000FFFF
TIMERn_BDR	0x0C	RW	Timer/Counter n B Data Register	0x0000FFFF
TIMERn_CAPDR	0x10	RO	Timer/Counter n Capture Data Register	0x00000000
TIMERn_PREDR	0x14	RW	Timer/Counter n Prescaler Data Register	0x00000FFF
TIMERn_CNT	0x18	RO	Timer/Counter n Counter Register	0x00000000
TIMERn_OUTCR	0x1C	RW	Timer/Counter n Output Control Register	0x00000000
TIMERn_DLY	0x20	RW	Timer/Counter n Output Delay Data Register	0x00000000
TIMERn_INTCR	0x24	RW	Timer/Counter n Interrupt Control Register	0x00000000
TIMERn_INTFLAG	0x28	RW	Timer/Counter n Interrupt Flag Register	0x00000000
TIMERn_ADTCR	0x2C	RW	Timer/Counter n ADC Trigger Control Register	0x00000000

10.3.1 TIMERn_CR: timer/counter n control register

Timer module should be configured properly before running. Once target purpose is defined, the timer can be configured in the TIMERn_CR register. After configuring this register, a user can start or stop the timer function by using this register.

TIMERn_CR register is 32-bit size and accessible in 32/16/8-bit (n = 40, 41, 42, and 43).

TIMERn_CR=0x4000_2700, TIMERn_CR=0x4000_2780
TIMERn_CR=0x4000_2800, TIMERn_CR=0x4000_2880

31 30 29 28 27 26 25 24	23	22	21	20	19	18	17	16	15	14	13	12	11	10	9	8	7	6	5	4	3	2	1	0
Reserved	TnFRCEN	Reserved	TnFRCS		CNTSHEN	Reserved	CNTSH		TnEN	TnCLK	TnMS		TnECE	TnOPAIR	DLYEN	DLYPOS	UPDT		TnINPOL		Reserved		TnPAU	TnCLR
0x00	0	0	0	0	0	0	0	0	0	0	0		0	0	0	0	0	0	0	0	0	0	0	0
–	RW	–	RW	RW	RW	–	RW	RW	RW	RW	RW	RW	RW	RW	RW	RW	RW	RW	RW	RW	–	–	RW	RW

23	TnFRCEN	Timer n Output Force Level Enable.
		0 Disable output force level.
		1 Enable output force level during the valid level of the selected Tn force input.
		NOTE: The output force level depends on the LVLA and LVLB bits.
21 20	TnFRCS	Timer n Force Input Selection.
		00 T40 force input.
		01 T41 force input.
		10 T42 force input.
		11 T43 force input.
19	CNTSHEN	Timer Counter Sharing Enable.
		0 Disable counter sharing.
		1 Enable counter sharing
17 16	CNTSH	Timer Counter Sharing Selection.
		00 Timer n uses timer 40's counter instead of itself.
		01 Timer n uses timer 41's counter instead of itself.
		10 Timer n uses timer 42's counter instead of itself.
		11 Timer n uses timer 43's counter instead of itself.
		NOTES: 1. When using the timer's own counter, timer counter sharing function should be disabled by CNTSHEN = "0b". 2. When using the counter sharing, the TnMS[1:0], UPDT[1:0], and TIMERn_PDR of the sharing timers must have the same value, respectively. That is, the same value must be written to the registers of the sharing timers. 3. When using of the counter sharing, the TIMERn_PDR of the master is copied to the TIMERn_PDR of the slave and can't be written to the slave's TIMERn_PDR.
15	TnEN	Timer n Operation Enable.
		0 Disable timer n operation.
		1 Enable timer n operation (Counter clear and start)
14	TnCLK	Timer n Clock Selection.
		0 Select an internal prescaler clock.
		1 Select an external clock.
		NOTE: This bit should be changed while TnEN bit is '0'.
13 12	TnMS	Timer n Operation Mode Selection.
		00 Interval mode. (All match interrupts can occur)
		01 Capture mode. (The Period-match interrupt can occur)
		10 Back-to-back mode. (All match and bottom interrupts can occur)
		11 One-shot interval mode (All match interrupts can occur)
		NOTE: These bits should be changed during TnEN bit is '0'.
11	TnECE	Timer n External Clock Edge Selection.
		0 Select falling edge of external clock.

		1	Select rising edge of external clock.
10	TnOPAIR	Timer n Output Pair Selection	
		0	No output pair
		1	Output pair (The TnOUTB signal depends on TIMERn_ADR register)
9	DLYEN	Delay Time Insertion Enable. This bit is effective on the TnOPAIR = ‘1’.	
		0	Disable to insert delay time to the TnOUTA/TnOUTB.
		1	Enable to insert delay time to the TnOUTA/TnOUTB.
		NOTE: The “delay time insertion” doesn’t work in one-shot interval mode.	
8	DLYPOS	Delay Time Insertion Position.	
		0	Insert at front of TnOUTA and at back of TnOUTB pins.
		1	Insert at back of TnOUTA and at front of TnOUTB pins.
7 6	UPDT	Data Reload Time Selection.	
		00	Update data to buffer at the time of writing.
		01	Update data to buffer at period match.
		10	Update data to buffer at bottom.
		11	Not used
5 4	TnINPOL	Timer n Input Capture/”Force level” Polarity Selection.	
		00	Capture on falling edge, Force level on low level.
		01	Capture on rising edge, Force level on high level.
		10	Capture on both of falling and rising edge, Not available for force level.
		11	Reserved
		NOTE: The counter of timer n is cleared to 0x0000 at valid edge in capture mode.	
1	TnPAU	Timer n Counter Temporary Pause Control.	
		0	Continue counting.
		1	Temporary pause.
0	TnCLR	Timer n Counter and Prescaler Clear.	
		0	No effect.
		1	Clear timer n counter and prescaler (Automatically cleared to ‘0’ after operation)

10.3.2 TIMERn_PDR: timer/counter n period data register

TIMERn_PDR register is 32-bit size and accessible in 32/16/8-bit (n = 40, 41, 42 and 43).

TIMER40_PDR=0x4000_2704, TIMER41_PDR=0x4000_2784
TIMER42_PDR=0x4000_2804, TIMER43_PDR=0x4000_2884

31 30 29 28 27 26 25 24	23 22 21 20 19 18 17 16	15 14 13 12 11 10 9 8	7 6 5 4 3 2 1 0
Reserved		PDATA	
0x0000		0xFFFF	
–		RW	

15 0	PDATA	Timer/Counter n Period Data. The range is 0x0002 to 0xFFFF. Period match time: (PDATA[15:0]+1)÷fTn

10.3.3 TIMERn_ADR: timer/counter n A data register

TIMERn_ADR register is 32-bit size and accessible in 32/16/8-bit (n = 40, 41, 42 and 43).

TIMER40_ADR=0x4000_2708, TIMER41_ADR=0x4000_2788
TIMER42_ADR=0x4000_2808, TIMER43_ADR=0x4000_2888

31 30 29 28 27 26 25 24	23 22 21 20 19 18 17 16	15 14 13 12 11 10 9 8	7 6 5 4 3 2 1 0
Reserved		ADATA	
0x0000		0xFFFF	
-		RW	

15 0	ADATA	Timer/Counter n A Data. The range is 0x0000 to 0xFFFF. A match time: (ADATA[15:0])÷fTn

10.3.4 TIMERn_BDR: timer/counter n B data register

TIMERn_BDR register is 32-bit size and accessible in 32/16/8-bit (n = 40, 41, 42 and 43).

TIMER40_BDR=0x4000_270C, TIMER41_BDR=0x4000_278C
TIMER42_BDR=0x4000_280C, TIMER43_BDR=0x4000_288C

31 30 29 28 27 26 25 24	23 22 21 20 19 18 17 16	15 14 13 12 11 10 9 8	7 6 5 4 3 2 1 0
Reserved		BDATA	
0x0000		0xFFFF	
–		RW	

15 0	BDATA	Timer/Counter n B Data. The range is 0x0000 to 0xFFFF. B match time: (BDATA[15:0])÷fTn

10.3.5 TIMERn_CAPDR: timer/counter n capture data register

TIMERn_CAPDR register is 32-bit size and accessible in 32/16/8-bit (n = 40, 41, 42 and 43).

TIMER40_CAPDR=0x4000_2710, TIMER41_CAPDR=0x4000_2790
TIMER42_CAPDR=0x4000_2810, TIMER43_CAPDR=0x4000_2890

31 30 29 28 27 26 25 24	23 22 21 20 19 18 17 16	15 14 13 12 11 10 9 8	7 6 5 4 3 2 1 0
Reserved		CAPD	
0x0000		0x0000	
–		RO	

15 0	CAPD	Timer/Counter n Capture Data.

10.3.6 TIMERn_PREDR: timer/counter n prescaler data register

TIMERn_PREDR register is 32-bit size and accessible in 32/16/8-bit (n = 40, 41, 42 and 43).

TIMER40_PREDR=0x4000_2714, TIMER41_PREDR=0x4000_2794
TIMER42_PREDR=0x4000_2814, TIMER43_PREDR=0x4000_2894

31 30 29 28 27 26 25 24	23 22 21 20 19 18 17 16	15 14 13 12 11 10 9 8	7 6 5 4 3 2 1 0
Reserved		PRED	
0x00000		0xFFF	
–		RW	

11 0	PRED	Timer/Counter n Prescaler Data.

10.3.7 TIMERn_CNT: timer/counter n counter register

TIMERn_CNT register is 32-bit size and accessible in 32/16/8-bit (n = 40, 41, 42 and 43).

TIMER40_CNT=0x4000_2718, TIMER41_CNT=0x4000_2798
TIMER42_CNT=0x4000_2818, TIMER43_CNT=0x4000_2898

31 30 29 28 27 26 25 24	23 22 21 20 19 18 17 16	15 14 13 12 11 10 9 8	7 6 5 4 3 2 1 0
Reserved		CNT	
0x0000		0x0000	
-		RO	

15 0	CNT	Timer/Counter n Counter.

10.3.8 TIMERn_OUTCR: timer/counter n output control register

TIMERn_OUTCR register is 32-bit size and accessible in 32/16/8-bit (n = 40, 41, 42 and 43).

TIMER40_OUTCR=0x4000_271C, TIMER41_OUTCR=0x4000_279C
TIMER42_OUTCR=0x4000_281C, TIMER43_OUTCR=0x4000_289C

31 30 29 28 27 26 25 24	23 22 21 20 19 18 17 16	15 14 13 12 11 10	9	8	7 6	5	4	3 2	1	0
Reserved		Reserved	POLB	POLA	Reserved	TnBOE	TnAOE	Reserved	LVLB	LVLA
0x0000		0 0 0 0 0 0	0	0	0 0	0	0	0 0	0	0
–		- - - - - -	RW	RW	- -	RW	RW	- -	RW	RW

9	POLB	TnOUTB Output Polarity Selection.
		0 Low level start (The TnOUTB pin is started with low level after counting)
		1 High level start (The TnOUTB pin is started with high level after counting)
8	POLA	TnOUTA Output Polarity Selection.
		0 Low level start (The TnOUTA pins are started with low level after counting)
		1 High level start (The TnOUTA pins are started with high level after counting)
5	TnBOE	TnOUTB Output Enable.
		0 Disable output.
		1 Enable output.
4	TnAOE	TnOUTA Output Enable.
		0 Disable output.
		1 Enable output.
1	LVLB	Configure TnOUTB output When Disable.
		0 Low level
		1 High level
0	LVLA	Configure TnOUTA output When Disable.
		0 Low level
		1 High level

10.3.9 TIMERn_DLY timer/counter n output delay data register

TIMERn_DLY register is 32-bit size and accessible in 32/16/8-bit (n = 40, 41, 42 and 43).

TIMER40_DLY=0x4000_2720, TIMER41_DLY=0x4000_27A0
TIMER42_DLY=0x4000_2820, TIMER43_DLY=0x4000_28A0

31 30 29 28 27 26 25 24	23 22 21 20 19 18 17 16	15 14 13 12 11 10	9 8	7 6 5 4 3 2 1 0
Reserved			DLY	
0x00000			0x000	
–			RW	

9	DLY	Timer/Counter n Output Delay Data.
0		Delay time: (DLY[9:0]+1)÷fTn

10.3.10 TIMERn_INTCR: timer/counter n interrupt control register

TIMERn_INTCR register is 32-bit size and accessible in 32/16/8-bit (n = 40, 41, 42 and 43).

TIMER40_INTCR=0x4000_2724, TIMER41_INTCR=0x4000_27A4
TIMER42_INTCR=0x4000_2824, TIMER43_INTCR=0x4000_28A4

31 30 29 28 27 26 25 24	23 22 21 20 19 18 17 16	15 14 13 12	11	10	9	8	7 6 5 4	3 2	1 0
Reserved			TnFRCIEN	TnCIEN	TnBTIEN	TnPMIEN	Reserved	TnBMIEN	TnAMIEN
0x00000			0	0	0	0	0 0 0 0	0 0	0 0
–			RW	RW	RW	RW	– – – –	RW RW	RW RW

11	TnFRCIEN	Timer n Output Force Level Interrupt Enable.	
		0	Disable timer n output hold interrupt.
		1	Enable timer n output hold interrupt.
10	TnCIEN	Timer n Capture Interrupt Enable.	
		0	Disable timer n capture interrupt.
		1	Enable timer n capture interrupt.
9	TnBTIEN	Timer n Bottom Interrupt Enable.	
		0	Disable timer n bottom interrupt.
		1	Enable timer n bottom interrupt.
8	TnPMIEN	Timer n Period Match Interrupt Enable.	
		0	Disable timer n period interrupt.
		1	Enable timer n period interrupt.
3 2	TnBMIEN	Timer n B Match Interrupt Enable.	
		00	Disable B match interrupt.
		01	Enable B match interrupt on up counting.
		10	Disable B match interrupt on down counting.
		11	Disable B match interrupt on up and down counting.
1 0	TnAMIEN	Timer n A Match Interrupt Enable.	
		00	Disable A match interrupt.
		01	Enable A match interrupt on up counting.
		10	Disable A match interrupt on down counting.
		11	Disable A match interrupt on up and down counting.

10.3.11 TIMERn_INTFLAG: timer/counter n interrupt flag register

TIMERn_INTFLAG register is 32-bit size and accessible in 32/16/8-bit (n = 40, 41, 42 and 43).

TIMER40_INTFLAG=0x4000_2728, TIMER41_INTFLAG=0x4000_27A8
TIMER42_INTFLAG=0x4000_2828, TIMER43_INTFLAG=0x4000_28A8

31 30 29 28 27 26 25 24	23 22 21 20 19 18 17 16	15 14 13 12 11 10 9 8	7	6	5	4	3	2	1	0
Reserved			TnFRCIFLAG	TnCIFLAG	TnBTIFLAG	TnPMIFLAG	Reserved		TnBMIFLAG	TnAMIFLAG
0x000000			0	0	0	0	0	0	0	0
–			RW	RW	RW	RW	-	-	RW	RW

7	TnFRCIFLAG	Timer n Output Force Level Interrupt Flag.
		0 No request occurred.
		1 Request occurred. The bit will be cleared to ‘0’ when ‘1’ is written to this bit.
6	TnCIFLAG	Timer n Capture Interrupt Flag.
		0 No request occurred.
		1 Request occurred. The bit will be cleared to ‘0’ when ‘1’ is written to this bit.
5	TnBTIFLAG	Timer n Bottom Interrupt Flag bit. This bit is effective only at back-to-back mode.
		0 No request occurred.
		1 Request occurred. The bit will be cleared to ‘0’ when ‘1’ is written to this bit.
4	TnPMIFLAG	Timer n Period Match Interrupt Flag.
		0 No request occurred.
		1 Request occurred. The bit will be cleared to ‘0’ when ‘1’ is written to this bit.
1	TnBMIFLAG	Timer n B Match Interrupt Flag.
		0 No request occurred.
		1 Request occurred. The bit will be cleared to ‘0’ when ‘1’ is written to this bit.
0	TnAMIFLAG	Timer n A Match Interrupt Flag.
		0 No request occurred.
		1 Request occurred. The bit will be cleared to ‘0’ when ‘1’ is written to this bit.

10.3.12 TIMERn_ADTCR: timer/counter n ADC trigger control register

TIMERn_ADTCR register is 32-bit size and accessible in 32/16/8-bit (n = 40, 41, 42 and 43).

TIMER40_ADTCR=0x4000_272C, TIMER41_ADTCR=0x4000_27AC
TIMER42_ADTCR=0x4000_282C, TIMER43_ADTCR=0x4000_28AC

31 30 29 28 27 26 25 24	23 22 21 20 19 18 17 16	15 14 13 12 11 10	9	8	7 6 5 4	3 2	1 0
Reserved			TnBTTG	TnPMTG	Reserved	TnBMTG	TnAMTG
0x000000			0	0	0 0 0 0	0 0	0 0
–			RW	RW	– – – –	RW RW	RW RW

9	TnBTTG	Select Timer n Bottom for ADC Trigger Signal Generator.	
		0	Disable ADC trigger signal generator by bottom.
		1	Enable ADC trigger signal generator by bottom.
8	TnPMTG	Select Timer n Period Match for ADC Trigger Signal Generator.	
		0	Disable ADC trigger signal generator by period match.
		1	Enable ADC trigger signal generator by period match.
3 2	TnBMTG	Select Timer n B Match for ADC Trigger Signal Generator.	
		00	Disable ADC trigger signal generator by B match.
		01	Enable ADC trigger signal generator by B match on up counting
		10	Enable ADC trigger signal generator by B match on down counting
		11	Enable ADC trigger signal generator by B match on up and down counting.
1 0	TnAMTG	Select Timer n A Match for ADC Trigger Signal Generator.	
		00	Disable ADC trigger signal generator by A match.
		01	Enable ADC trigger signal generator by A match on up counting
		10	Enable ADC trigger signal generator by A match on down counting.
		11	Enable ADC trigger signal generator by A match on up and down counting.

10.4 Functional description

10.4.1 Timer counter 40/41/42/43

Timer/counter n can use an internal or an external clock source (ECn). A clock selection logic can select a clock source and it is controlled by clock selection bits (TnCLK).

Timer n clock source: {PCLK/(TIMERn_PREDR+1)}, ECn

In Capture mode, by TnINP, data is captured into a corresponding capture data register (TIMERn_CAPDR). Timer n outputs the comparison result between counter and data register through TnOUTA/TnOUTB ports in Timer/counter and Back-to-back mode.

The outputs, TnOUTA/TnOUTB, can be forced to a fixed level during an external force input signal by hardware when TnFRCEN=1. (n = 40, 41, 42 and 43)

Table 41. Timer n Operating Modes (n = 40, 41, 42, and 43)

TnEN	TnMS	Timer n
1	00	16-bit Interval mode
1	01	16-bit Capture mode
1	10	16-bit back-to-back mode
1	11	16-bit one-shot interval mode

10.4.2 Timer 40/41/42/43 Capture mode

16-bit timer capture mode is set by configuring the TnMS[1:0] as ‘01’. The clock source can use internal or external clock input.

This 16-bit timer capture mode basically has the same function as the 16-bit interval mode. An interrupt takes place when the 16-bit up/down counter and the TIMERn_PDR have the same values. The 16-bit up/down counter value is automatically cleared by a match signal. It can also be cleared by software (TnCLR).

A timer interrupt in Capture mode is very useful when the pulse width of captured signal is wider than the maximum period of timer.

The capture result is loaded into TIMERn_CAPDR. (n = 40, 41, 42 and 43)

Figure 36. 16-bit Capture Mode for Timer 40/41/42/43

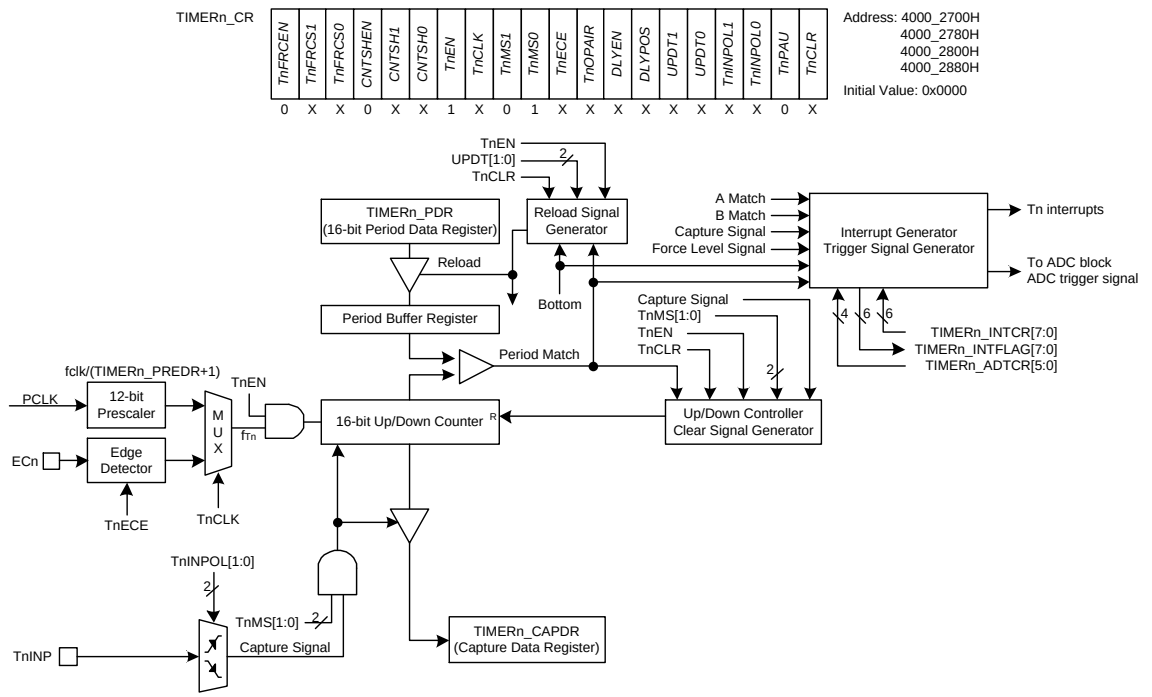

NOTES:

1. The Period match only can occur in capture mode.
2. The 16-bit up/down counter in capture mode is cleared to “0x0000” after the counter value is loaded to the TIMERn_CAPDR register at valid edge.

10.4.3 Timer 40/41/42/43 Interval mode

Interval mode is set by configuring the TnMS[1:0] as ‘00’. Each of Timer 40/41/42/43 has a counter and data registers.

The 16-bit up/down counter is increased by internal or external clock input. The timer can use an input clock with 12-bit prescaler division rates (TIMERn_PREDR[11:0]). When the values of 16-bit up/down counter and the TIMERn_PDR are the same in the timer, a match signal is generated and the period match interrupt of the timer is occurred. The 16-bit up/down counter value is automatically cleared by the match signal. It can also be cleared by software (TnCLR).

The timer has 2-channel pins that generate PWM outputs of up to 16-bit resolution. The match signals and interrupts of period/A/B can be generated when the 16-bit counter value is the same as the value of TIMERn_PDR, TIMERn_ADR, and TIMERn_BDR, respectively. The period and duty of the output is determined by the TIMERn_PDR (period register), TIMERn_ADR (A channel duty register), and TIMERn_BDR (B channel duty register).

TnOUTA and TnOUTB’s Period = [TIMERn_PDR + 1] X Source Clock
TnOUTA Duty = [TIMERn_ADR] X Source Clock
TnOUTB Duty = [TIMERn_BDR] X Source Clock

POLA/POLB bit of TIMERn_OUTCR register decides the polarity of output. If the POLA/POLB bit is set to ‘1’, the TnOUTA/TnOUTB output is high level start and if the POLA/POLB bit is cleared to ‘0’, the TnOUTA/TnOUTB output is low level start, respectively. (n = 40, 41, 42 and 43)

Table 42. TnOUTA/B Channel Polarity

PnAOE	PnBOE	POLA	POLB	TnOUTA Pin Output	PnOUTB Pin Output
1	1	0	0	Low level start	Low level start
		0	1	Low level start	High level start
		1	0	High level start	Low level start
		1	1	High level start	High level start

NOTE: Where n = 40, 41, 42 and 43.

Figure 37. Example of TnOUTA at 4MHz (n = 40, 41, 42 and 43)

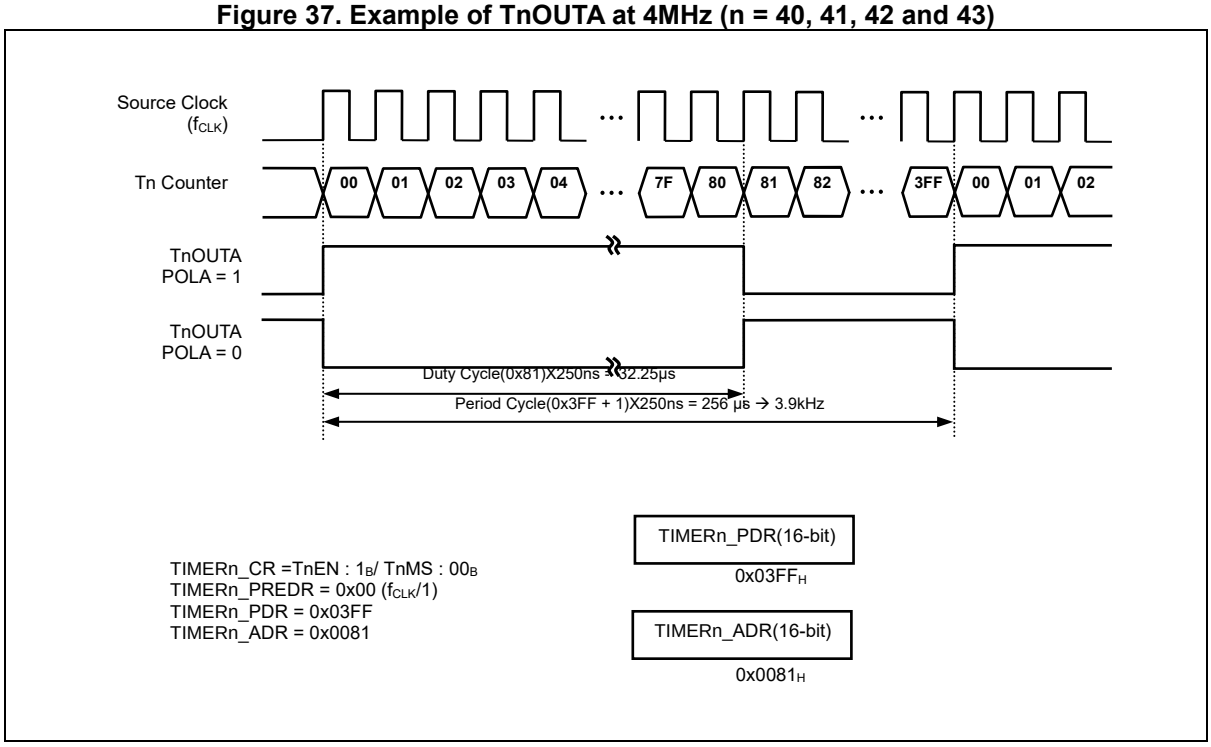

10.4.3.1 Data reload time selection

Data reload time can be selected from “update data to buffer at the time of writing”, “update data to buffer at period match”, or “update data to buffer at bottom”. The UPDT[1:0] bits of TIMERn_CR register is used to select the data reload time to upload into buffer.

Figure 38. Example of Changing the Period in Absolute Duty Cycle at 4MHz (n = 40, 41, 42 and 43)

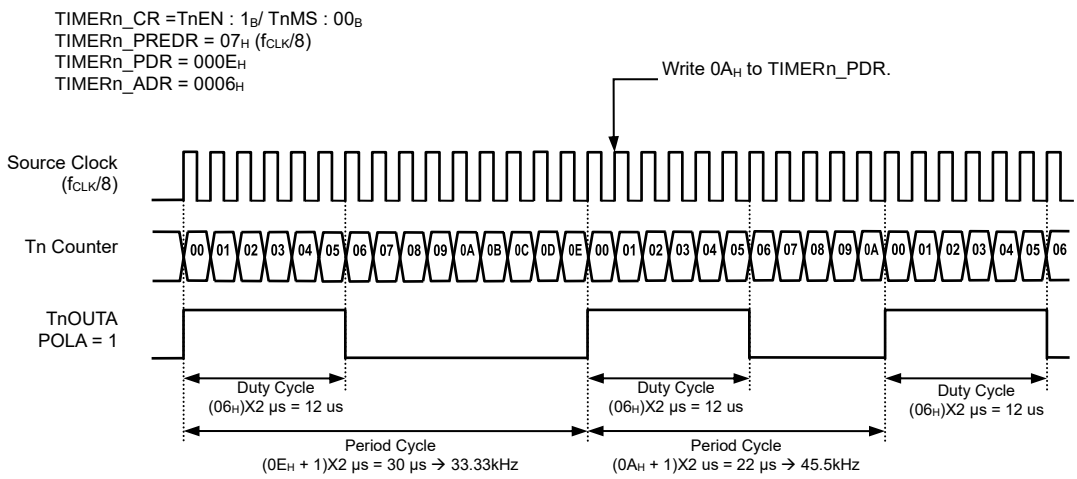

NOTE: This example timing wave shows the data reload time is chosen as the time of writing mode (UPDT[1:0] = “00”).

10.4.3.2 Timer output delay

Using the DLYEN bit, DLYPOS bit, the TIMERn_DLY register can delay the PWM output. When DLYPOS is set to ‘0’, the delay is inserted in front of TnOUTA and behind TnOUTB pins.

When DLYPOS is set to ‘1’, the delay is inserted behind TnOUTA and in front of TnOUTB pins.

Figure 39 and Figure 40 show example timing waveforms. (n = 40, 41, 42 and 43)

10.4.3.3 Output force level on the TnINP input

This is used to maintain the TnOUTA and the TnOUTB inactive level under overload condition. The output level of TnOUTA and TnOUTB can be driven to the levels selected by LVLB and LVLA bits during the input signal selected by TnFRCS[1:0] and TnINPOL[1:0] bits when TnFRCEN=1. The output signal remains at the selected level until the next cycle.

The TnFRCS[1:0] bits select an input pin for a given channel and the TnINPOL[1:0] bits select the valid level of input signal. As an example, see b of item 2 in Figure 39 and Figure 40 (n = 40, 41, 42 and 43).

Figure 39. Interval Mode Timing Chart With “DLYPOS = 0” (n = 40, 41, 42 and 43)

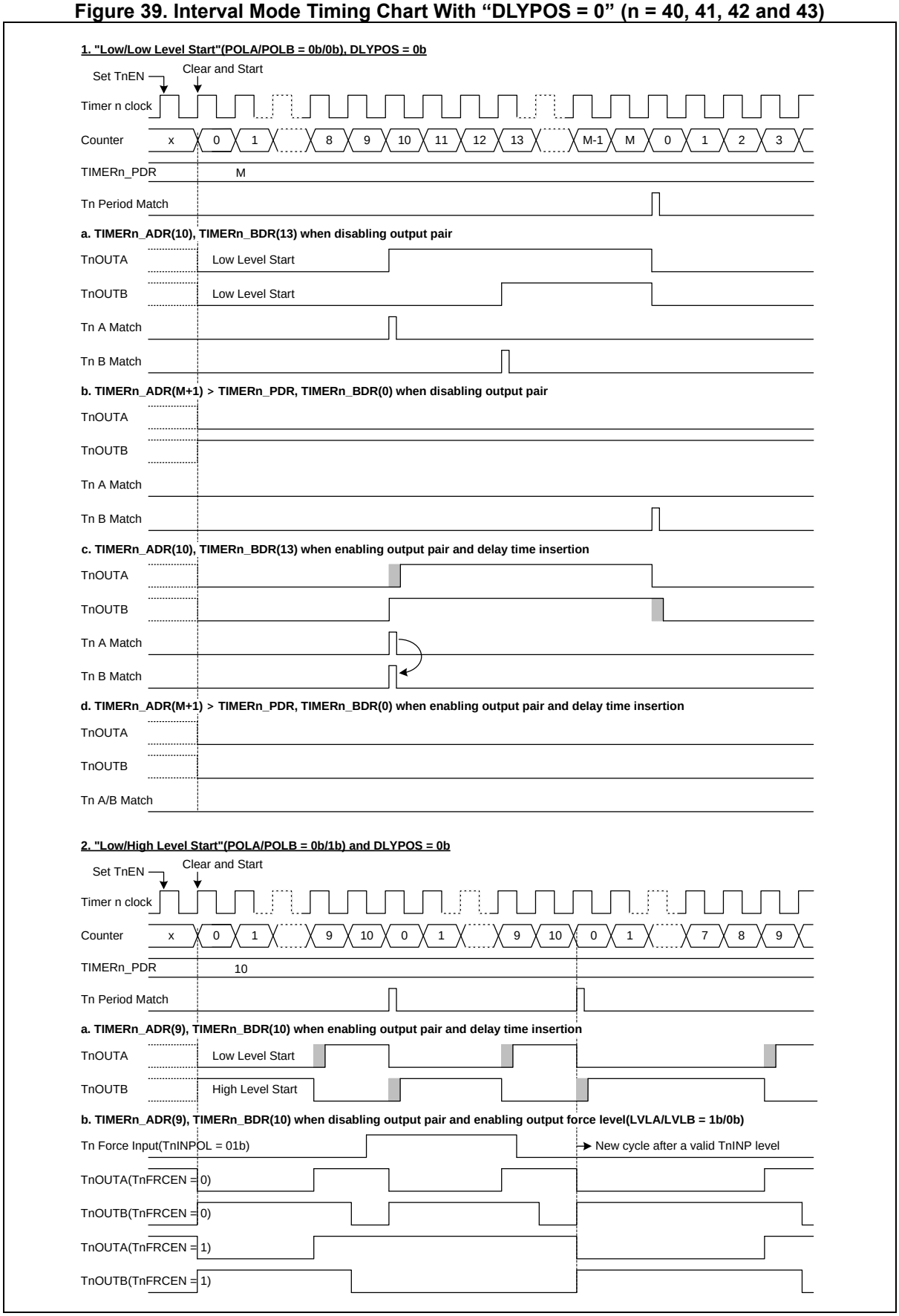

Figure 40. Interval Mode Timing Chart With “DLYPOS = 1” (n = 40, 41, 42 and 43)

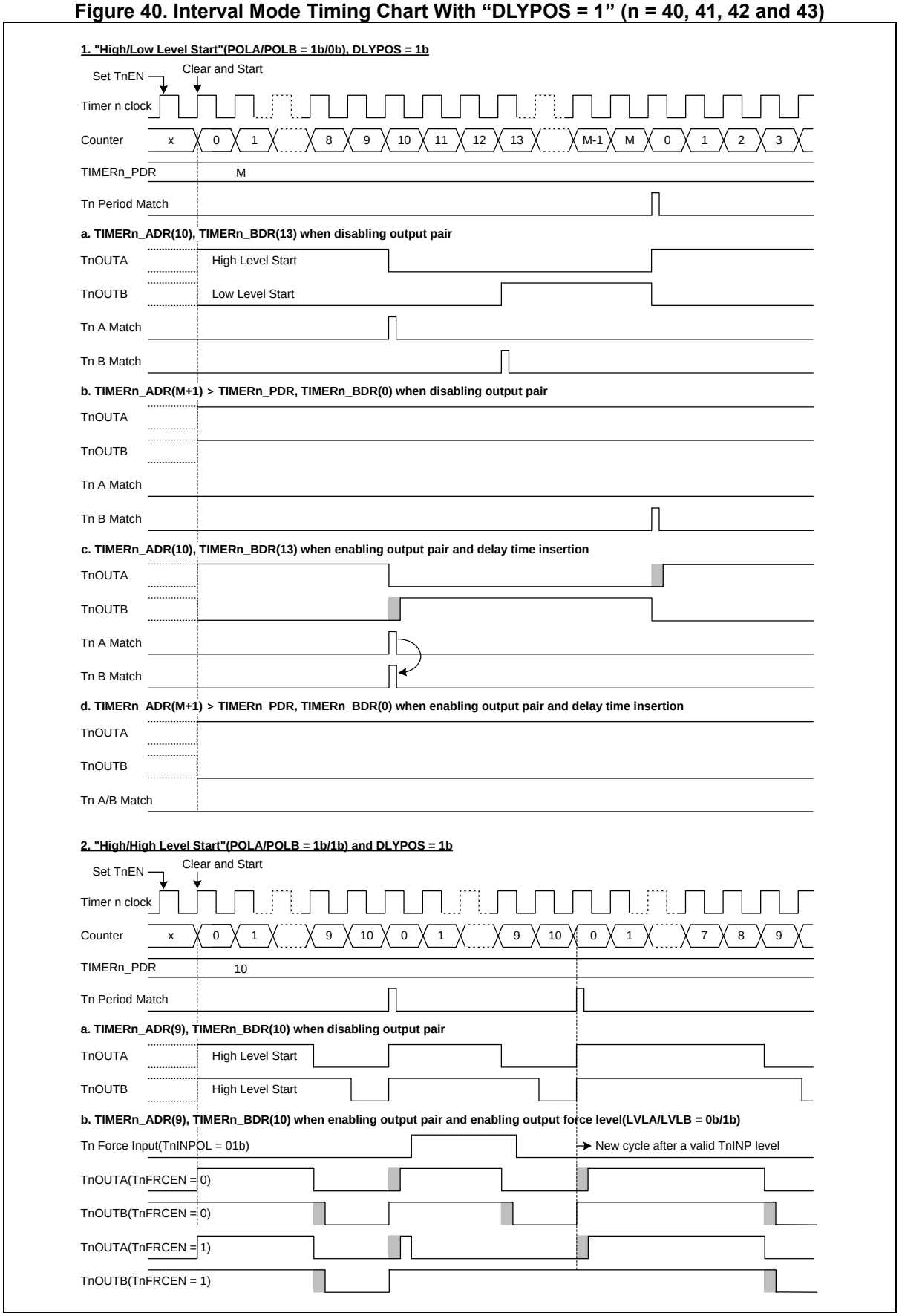

10.4.4 Back-to-back mode

Back-to-back mode is set by configuring the TnMS[1:0] as '10'. In the Back-to-back mode, the 16-bit up/down counter repeats the up/down counting. In fact, the effective duty and period becomes twice the register setting.

If the TIMERn_PDR's data value is set to "0x3210", 16-bit up/down counter will increment until it reaches 0x3210. At this point, a period match signal is generated and the period match interrupt takes place. Then the 16-bit up/down counter will decrement until it reaches 0x0000. At this point, the bottom interrupt takes place. This process repeats.

Since other functions operate similar to the interval mode, a user can refer to the interval mode for information of them. (n = 40, 41, 42 and 43)

Figure 41. Back-to-Back Mode Timing Chart with "DLYPOS = 0" (n = 40, 41, 42 and 43)

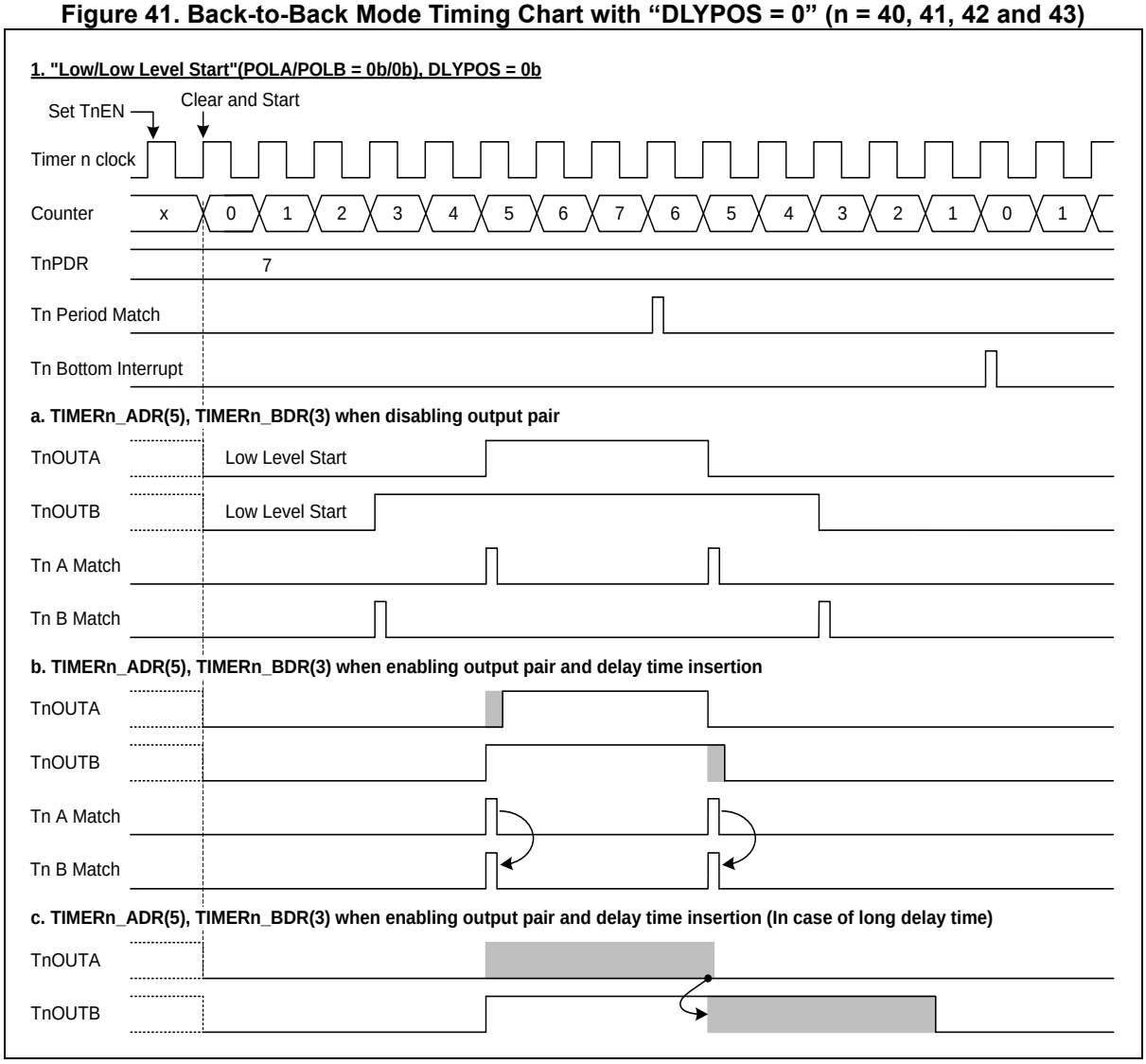

10.4.5 One-shot interval mode

One-shot interval mode is set by configuring the TnMS[1:0] as '11'. When the value of 16-bit up/down counter reaches the value of the TIMERn_PDR after start, a match signal is generated. The period match interrupt is occurred, the TnEN bit is automatically cleared to "0b", and the one-shot interval mode is finished successively.

Since other functions operate similar to the interval mode, a user can refer to the interval mode for information of them. (n = 40, 41, 42 and 43)

Figure 42. One-Shot Interval Timing Chart (n: 40, 41, 42 and 43)

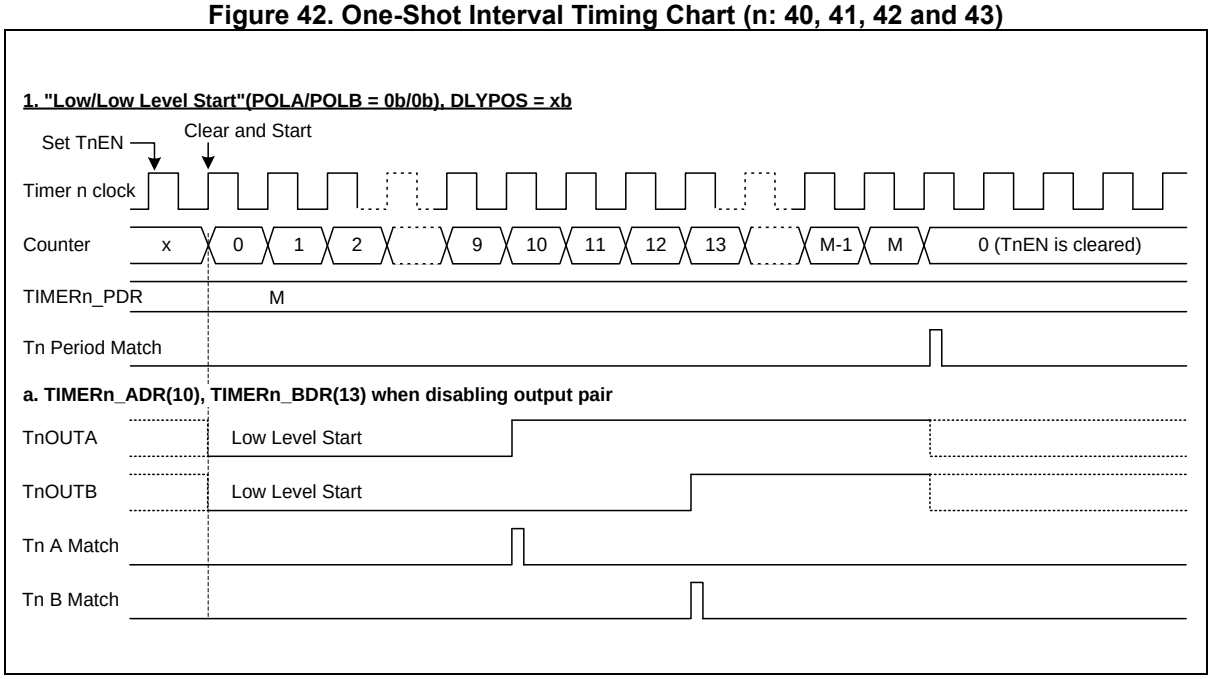

10.4.6 Timer counter sharing function

The timer can be linked together internally for synchronization. The timer to be used as a master must clear the CNTSHEN bit of the TIMERn_CR register to "0b". On the other hand, the timer to be used as slave should set the CNTSHEN bit of TIMERn_CR register to "1b".

The counter sharing timers, a master and slaves, must have the same values in the TnMS[1:0] and UPDT[1:0] bits of TIMERn_CR register and in the TIMERn_PDR register. If the values are different, the counter sharing function may not work correctly. The clock frequency of the timers must also be set to the same value for good chaining. (n = 40, 41, 42 and 43)

Table 43. Example of Timer Counter Sharing On Interval Mode

	TnEN	TnCLK	TnMS[1:0]	CNTSHEN	CNTSH[1:0]	UPDT[1:0]	PDR	PREDR
Master (T40)	1	Don't care		0	Don't care	One of 0x0 – 0x2	Don't care	
Slave 1 (T41)	1	Same as T40's		1	0x0 (T40)	Same as above	Same as T40's	
Slave 2 (T42)	1	Same as T40's		1	0x0 (T40)	Same as above	Same as T40's	

NOTES:

1. T40: Master, T41 and T42: Slave.
2. The TnMS[1:0] bits shall be set to the same value for the master and slave.
3. The TnCLK bit and TIMERn_PREDR register must also set to the same value for the same frequency of counter input.
4. The TIMERn_PDR register should also be set to the same value for the same period of timer outputs.

Figure 43. Example of Timer Counter Sharing On Interval Mode (n: 40, 41 and 42)

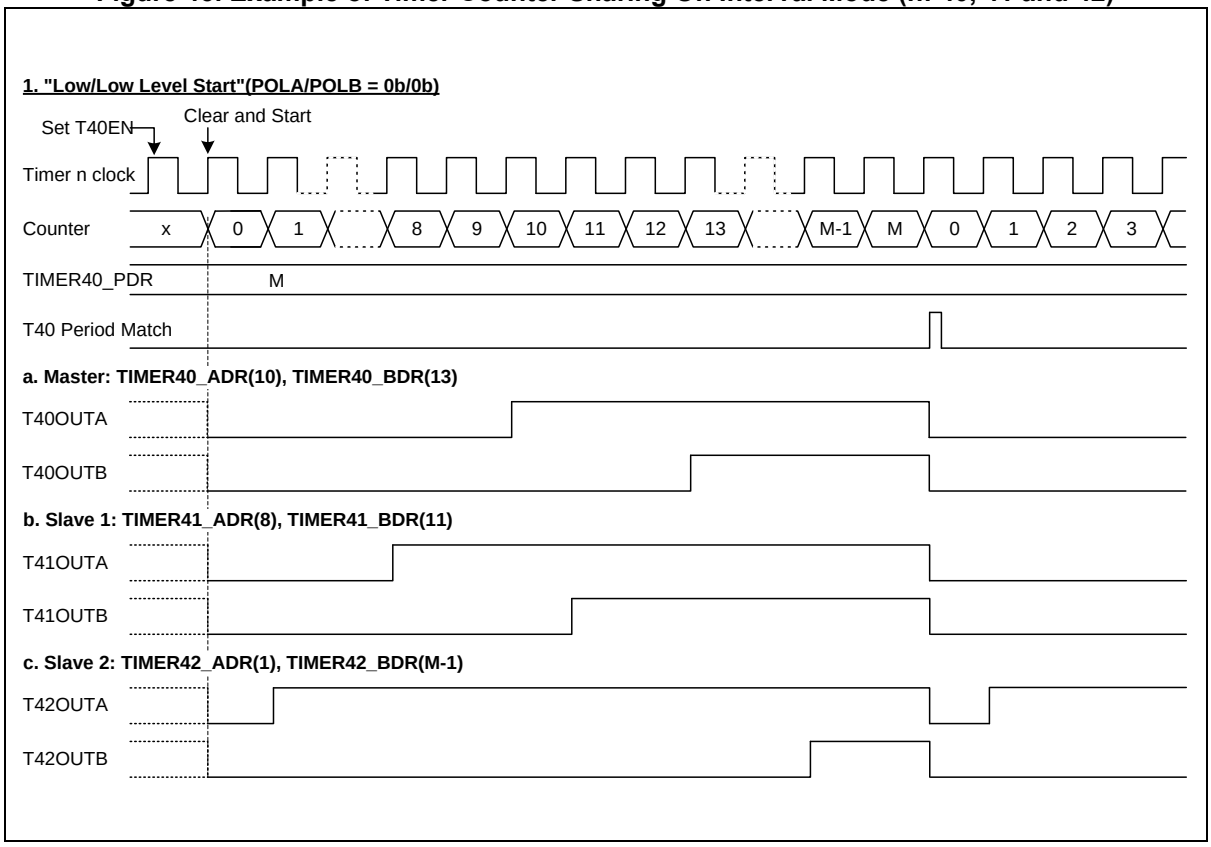

11 Timer counter 50

A timer block includes a single channel 16-bit general purpose timer. This timer has an independent 16-bit counter and a dedicated prescaler that feeds counting clock. It supports periodic timer, PWM pulse, one-shot timer and capture mode.

Additional free-run timer is optionally provided. Main purpose of this timer is to work as a periodical tick timer or to provide a wake-up source. The Timer counter 50 features the followings:

- 16-bit up-counter and 8-bit prescaler
- Interval timer, One-shot timer, PWM pulse, and Capture mode
- Synchronous start and clear function
- Low power operation with WDTRC or XSOSC

11.1 Timer counter 50 block diagram

Figure 44 shows the block diagram of a timer block unit.

Figure 44. Timer Counter n Block Diagram (n = 50)

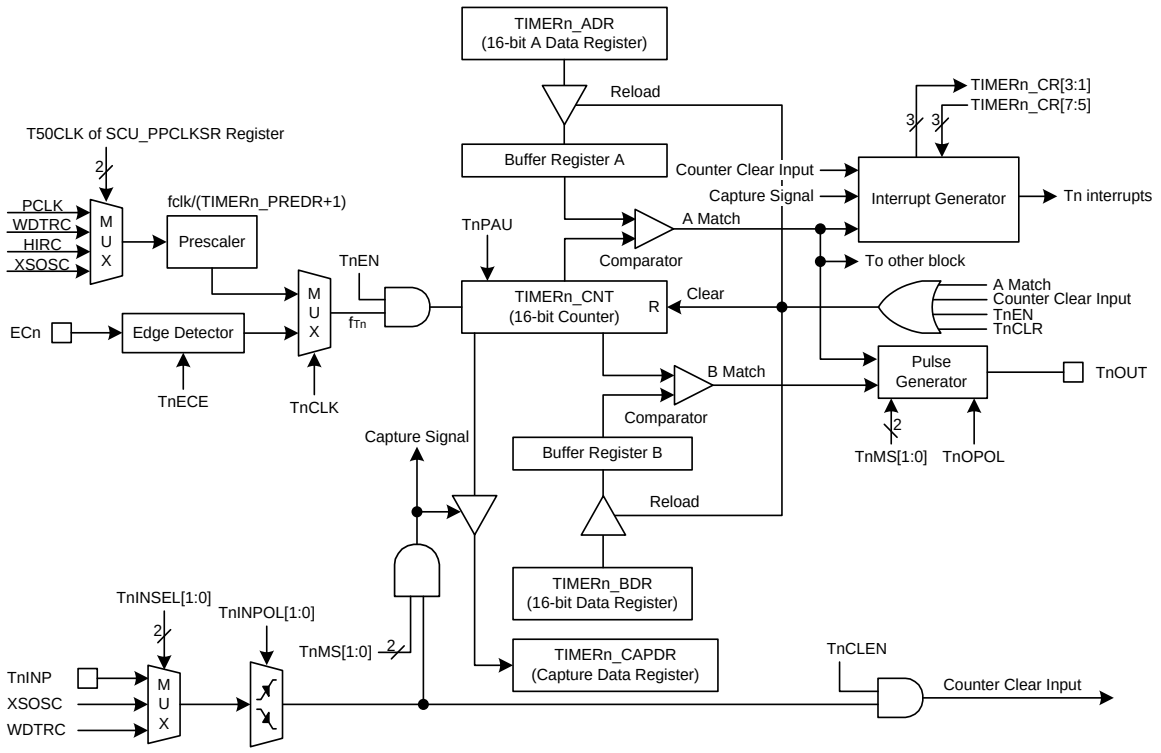

NOTES:

1. TnEN is automatically cleared to logic ‘0’ after one pulse is generated in PPG one-shot interval mode.
2. After TnEN bit is set, counting of TIMERn_CNT may be delayed by 2 clocks or more.
3. Counter clear input can control wake-up from SLEEP mode by suppressing A-match interrupt.
4. High/low width of ECn clock should be longer than PCLK clock period.
5. The capture and counter clear input interrupts cannot be used as a wake-up source in DEEP SLEEP mode. That is, the interrupts will not be generated in DEEP SLEEP mode.

11.2 Pin description for timer counter 50

Table 44. Pins and External Signals for Timer Counter 50 (n = 50)

Pin name	Type	Description
ECn	I	External clock input
TnINP	I	Capture/Clear input
TnOUT	O	PWM/one-shot output

11.3 Registers

Base address and register map of the Timer 50 are shown in Table 45 and Table 46.

Table 45. Base Address of Timer 50

Name	Base address
TIMER50	0x4000_2B00

Table 46. Timer Register Map (n = 50)

Name	Offset	Type	Description	Reset value
TIMERn_CR	0x0000	RW	Timer/Counter n Control Register	0x00000000
TIMERn_ADR	0x0004	RW	Timer/Counter n A Data Register	0x0000FFFF
TIMERn_BDR	0x0008	RW	Timer/Counter n B Data Register	0x0000FFFF
TIMERn_CAPDR	0x000C	RO	Timer/Counter n Capture Data Register	0x00000000
TIMERn_PREDR	0x0010	RW	Timer/Counter n Prescaler Data Register	0x000000FF
TIMERn_CNT	0x0014	RO	Timer/Counter n Counter Register	0x00000000

11.3.1 TIMERn_CR: timer/counter n control register

Timer module should be configured properly before running. Once target purpose is defined, the timer can be configured in the TIMERn_CR register. After configuring this register, a user can start or stop the timer function by using this register.

TIMERn_CR register is 32-bit size and accessible in 32/16/8-bit. (n = 50)

TIMER50_CR=0x4000_2B00

31 30 29 28 27 26 25 24	23	22	21	20	19	18	17	16	15	14	13	12	11	10	9	8	7	6	5	4	3	2	1	0
Reserved	Reserved			TnCLEN	TnINSEL			TnINPOL	TnEN	TnCLK	TnMS		TnECE	Reserved	TnOPOL	TnPAU	TnMIEN	TnCIEN	TnCLIEN	Reserved	TnMIFLAG	TnCIFLAG	TnCLIFLAG	TnCLR
0x00	0	0	0	0	0	0	0	0	0	0	0	0	0	0	0	0	0	0	0	0	0	0	0	0
–	-	-	-	RW	RW	RW	RW	RW	RW	RW	RW	RW	RW	-	RW	RW	RW	RW	RW	-	RW	RW	RW	RW

20	TnCLEN	Timer n Counter Clear Input Enable.
		0 Disable counter clear input.
		1 Enable counter clear input at a valid edge by TnINPOL[1:0] bits
19	TnINSEL	Timer n Input Signal Selection.
18		00 Select an external input signal.
		01 Select the XSOSC (External sub oscillator) signal
		10 Select the WDTRC (Watch-dog timer RC oscillator) signal
		11 Not used
		NOTE: This bit should be changed during T50EN bit is ‘0’.
17	TnINPOL	Timer n Input Capture/”Counter Clear Input” Polarity Selection.
16		00 Capture/”Counter clear input” on falling edge.
		01 Capture/”Counter clear input” on rising edge
		10 Capture/”Counter clear input” on both of falling and rising edge
		11 Reserved
15	TnEN	Timer n Operation Enable.
		0 Disable timer n operation.
		1 Enable timer n operation. (Counter clear and start)
14	TnCLK	Timer n Clock Selection.
		0 Select an internal prescaler clock.
		1 Select an external clock.
		NOTE: This bit should be changed while TnEN bit is ‘0’.
13	TnMS	Timer n Operation Mode Selection.
12		00 Timer/Counter mode. (TnOUT: toggle at A-match)
		01 Capture mode. (The A-match interrupt can occur)
		10 PPG one-shot mode. (TnOUT: Programmable pulse output)
		11 PPG repeat mode. (TnOUT: Programmable pulse output)
		NOTE: This bit should be changed while TnEN bit is ‘0’.
11	TnECE	Timer n External Clock Edge Selection.
		0 Select falling edge of external clock.
		1 Select rising edge of external clock.
9	TnOPOL	TnOUT Polarity Selection.
		0 Start high. (TnOUT is low level at disable)
		1 Start low. (TnOUT is high level at disable)
8	TnPAU	Timer n Counter Temporary Pause Control.
		0 Continue counting.
		1 Temporary pause.
7	TnMIEN	Timer n Match Interrupt Enable.
		0 Disable timer n match interrupt.
		1 Enable timer n match interrupt.
6	TnCIEN	Timer n Capture Interrupt Enable.
		0 Disable timer n capture interrupt.
		1 Enable timer n capture interrupt.
5	TnCLIEN	Timer n Counter Clear Input Interrupt Enable.

		0	Disable timer n Counter Clear Input interrupt.
		1	Enable timer n Counter Clear Input interrupt.
3	TnMIFLAG	Timer n Match Interrupt Flag.	
		0	No request occurred.
		1	Request occurred. The bit is cleared to ‘0’ when ‘1’ is written.
2	TnCIFLAG	Timer n Capture Interrupt Flag.	
		0	No request occurred.
		1	Request occurred. The bit is cleared to ‘0’ when ‘1’ is written.
		NOTE: This bit may not be set to ‘1’ by capture input signal in DEEP SLEEP mode.	
1	TnCLIFLAG	Timer n Counter Clear Input Interrupt Flag.	
		0	No request occurred.
		1	Request occurred. The bit is cleared to ‘0’ when ‘1’ is written.
		NOTE: This bit may not be set to ‘1’ by counter clear input signal in DEEP SLEEP mode.	
0	TnCLR	Timer n Counter and Prescaler Clear.	
		0	No effect.
		1	Clear timer n counter and prescaler. (Automatically cleared to ‘0’ after operation)

11.3.2 TIMERn_ADR: timer/counter n A data register

TIMERn_ADR register is 32-bit size and accessible in 32/16/8-bit. (n = 50)

TIMER50_ADR=0x4000_2B04

31 30 29 28 27 26 25 24	23 22 21 20 19 18 17 16	15 14 13 12 11 10 9 8	7 6 5 4 3 2 1 0
Reserved		**ADATA**	
0x0000		**0xFFFF**	
-		**RW**	

15 0	ADATA	Timer/Counter n A Data. The range is 0x0002 to 0xFFFF. A match time: (ADATA[15:0]+1) ÷ f_{Tn} **NOTE**: Do not write “0x0000” in the TIMERn_ADR register under PPG mode.

11.3.3 TIMERn_BDR: timer/counter n B data register

TIMERn_BDR register is 32-bit size and accessible in 32/16/8-bit. (n = 50)

TIMER50_BDR=0x4000_2B08

31 30 29 28 27 26 25 24	23 22 21 20 19 18 17 16	15 14 13 12 11 10 9 8	7 6 5 4 3 2 1 0
Reserved		**BDATA**	
0x0000		**0xFFFF**	
-		**RW**	

15 0	BDATA	Timer/Counter n B Data. The range is 0x0000 to 0xFFFF. B match time: (BDATA[15:0]) ÷ f_{Tn}

11.3.4 TIMERn_CAPDR: timer/counter n capture data register

TIMERn_CAPDR register is 32-bit size and accessible in 32/16/8-bit. (n = 50)

TIMER50_CAPDR=0x4000_2B0C

31 30 29 28 27 26 25 24	23 22 21 20 19 18 17 16	15 14 13 12 11 10 9 8	7 6 5 4 3 2 1 0
Reserved		**CAPD**	
0x0000		**0x0000**	
-		**RO**	

15 0	CAPD	Timer/Counter n Capture Data.

11.3.5 TIMERn_PREDR: timer/counter n prescaler data register

TIMERn_PREDR register is 32-bit size and accessible in 32/16/8-bit. (n = 50)

TIMER50_PREDR=0x4000_2B10

31 30 29 28 27 26 25 24	23 22 21 20 19 18 17 16	15 14 13 12 11 10 9 8	7 6 5 4 3 2 1 0
Reserved			**PRED**
0x000000			**0xFF**
-			**RW**

7 0	PRED	Timer/Counter n Prescaler Data.

11.3.6 TIMERn_CNT: timer/counter n counter register

TIMERn_CNT register is 32-bit size and accessible in 32/16/8-bit. (n = 50)

TIMER50_CNT=0x4000_2B14

31 30 29 28 27 26 25 24	23 22 21 20 19 18 17 16	15 14 13 12 11 10 9 8	7 6 5 4 3 2 1 0
Reserved		**CNT**	
0x0000		**0x0000**	
-		**RO**	

15 0	CNT	Timer/Counter n Counter.

11.4 Functional description

11.4.1 Timer counter 50

Timer/counter n can use an internal or an external clock as a clock source (ECn). A clock selection logic selects the clock source and the clock selection logic is controlled by clock selection bits (TnCLK). (n = 50)

- TIMER n clock sources are listed as followings:
  - PCLK/(TIMERn_PREDR +1)
  - WDTRC/(TIMERn_PREDR +1)
  - HIRC/(TIMERn_PREDR +1)
  - XSOSC/(TIMERn_PREDR +1)
  - ECn

In capture mode, by TnINP, XSOSC or WDTRC, data is captured into input capture data register (TIMERn_CAPDR). Timer n outputs the comparison result between counter and data register through TnOUT port in Timer/counter mode. In addition, Timer n outputs PWM waveform through TnOUT port in PPG mode. (n = 50)

Table 47. Timer n Operating Modes (n = 50)

TnEN	Alternative mode	TnMS[1:0]	TIMERn_PREDR	Timer n
1	T50OUT	00	0xXX	16-bit Timer/Counter Mode
1	T50INP	01	0xXX	16-bit Capture Mode
1	T50OUT	10	0xXX	16-bit PPG Mode(one-shot mode)
1	T50OUT	11	0xXX	16-bit PPG Mode(repeat mode)

11.4.2 16-bit Timer/counter mode

16-bit Timer/counter mode is selected by control register as shown in Figure 45. The 16-bit timer has a counter register and a data register.

The counter register is increased by internal or external clock input. Timer n can use an input clock with 8-bit prescaler division rates (TIMERn_PREDR) and an external Clock (ECn). When the values of TIMERn_CNT and TIMERn_ADR are the same in the timer n, a match signal is generated and the interrupt of Timer n takes place.

The TIMERn_CNT values are automatically cleared by the match signal. It can also be cleared by software (TnCLR).

Figure 45. 16-bit Timer/Counter Mode for Timer n (n = 50)

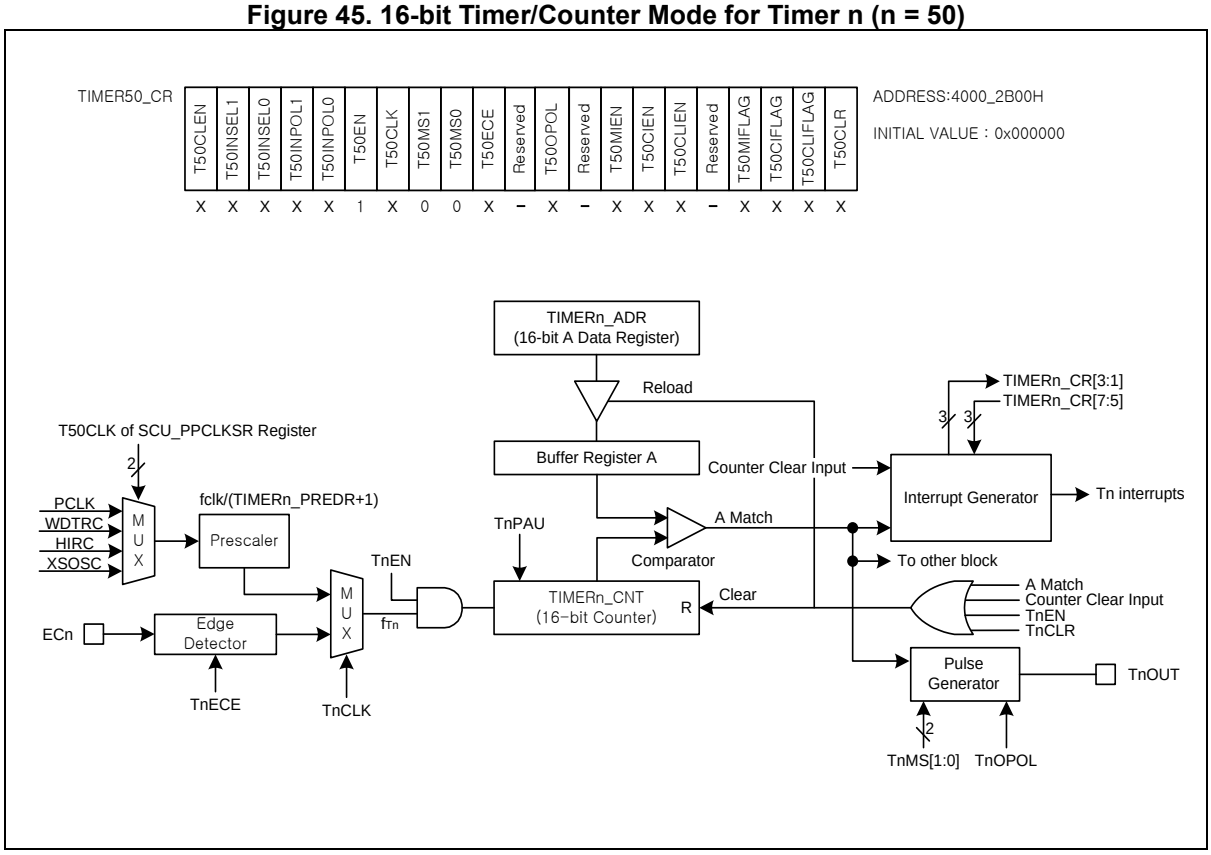

Figure 46. 16-bit Timer/Counter n Example (n = 50)

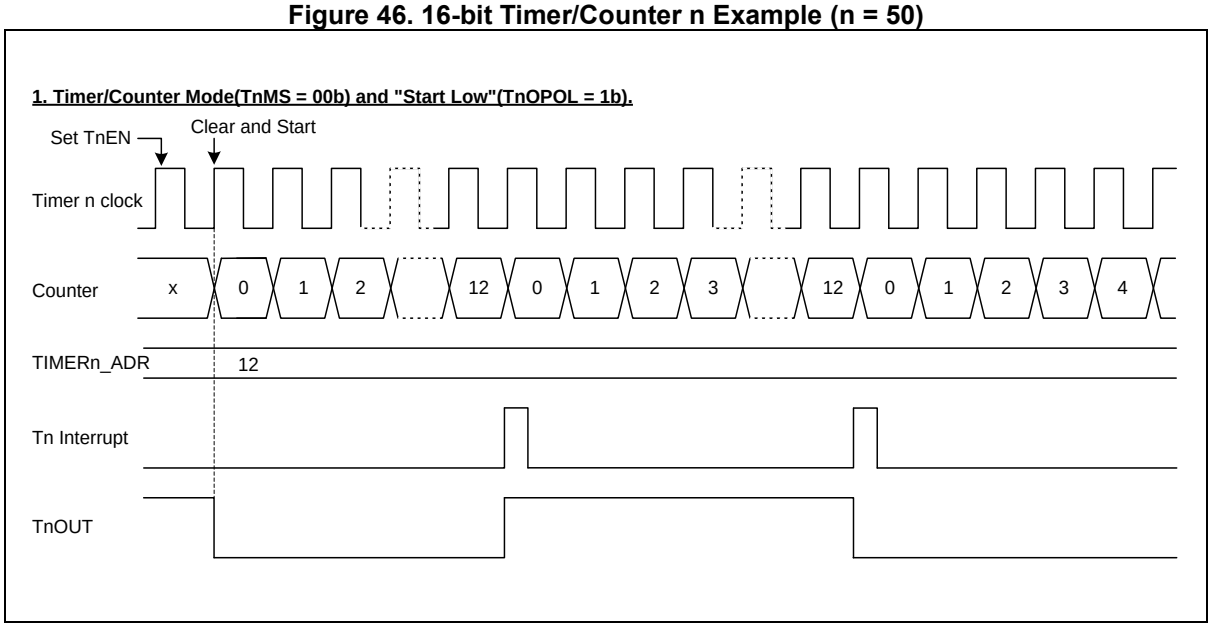

11.4.3 16-bit Capture mode

Timer n Capture mode is evoked by configuring TnMS[1:0] as ‘01’. The internal clock can be used as a clock source. It basically has the same function as the 16-bit timer/counter mode and an interrupt takes place when TIMERn_CNT becomes equal to TIMERn_ADR. (n = 50).

This timer interrupt in Capture mode is very useful when the pulse width of captured signal is wider than the maximum period of timer. The capture result is loaded into TIMERn_CAPDR. In the timer n capture mode, timer n output (TnOUT) waveform is not available.

Figure 47. 16-bit Capture Mode for Timer n (n = 50)

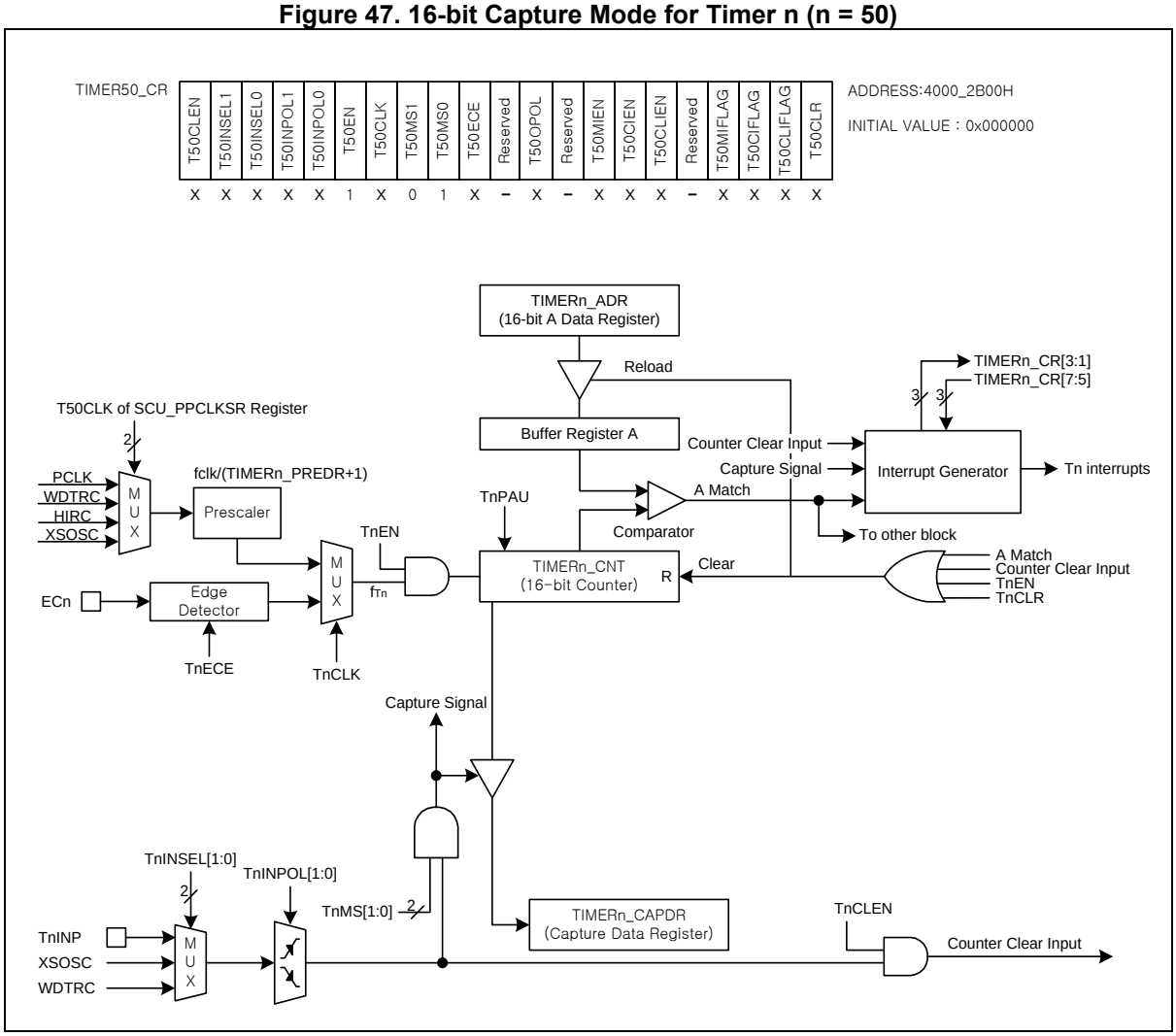

Figure 48. 16-bit Capture Mode for Timer 50

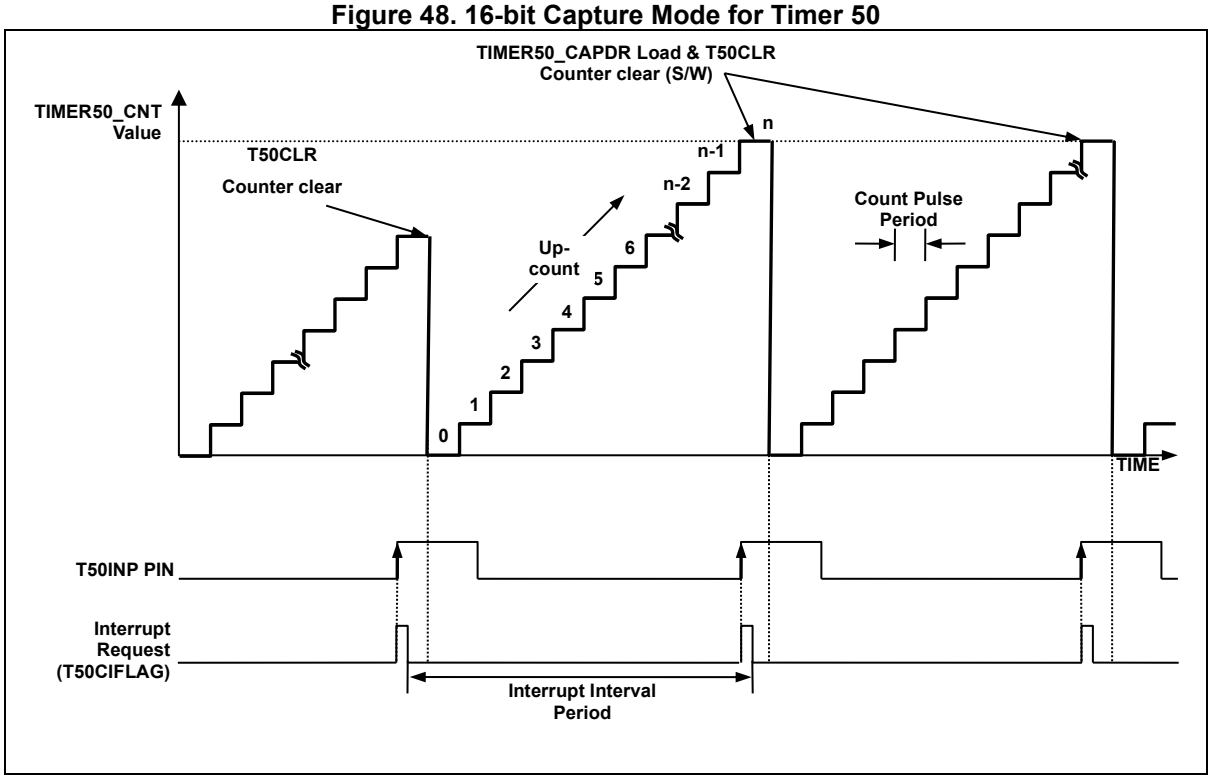

Figure 49. Express Timer Overflow in Capture Mode

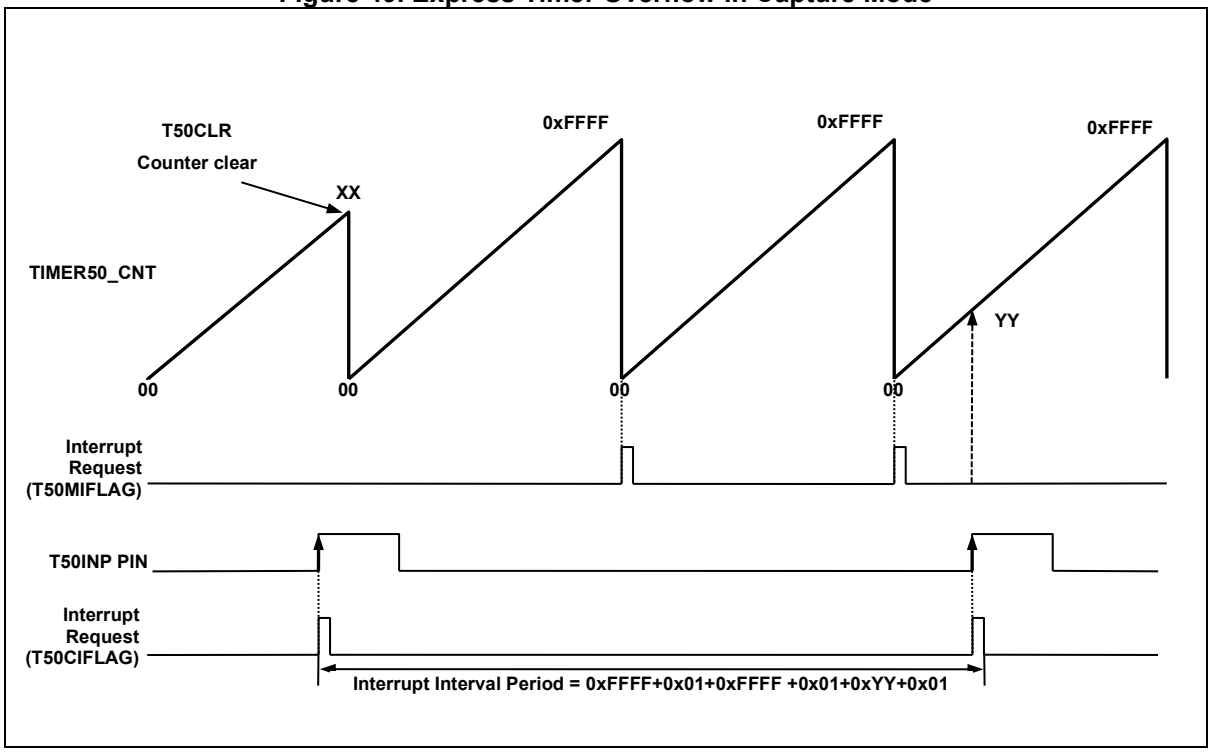

11.4.4 16-bit PPG mode

Timer n has a PPG (Programmable Pulse Generation) function. In PPG mode, the TnOUT pin generates PWM output of up to 16-bit resolution. This pin should be configured as TnOUT function in the Px_AFSR1/Px_AFSR2 for PWM output. The period of PWM output is determined by the TIMERn_ADR. The duty of PWM output is determined by TIMERn_BDR. (x = A to F)

Figure 50. 16-bit PPG Repeat and One-shot Mode for Timer n (n = 50)

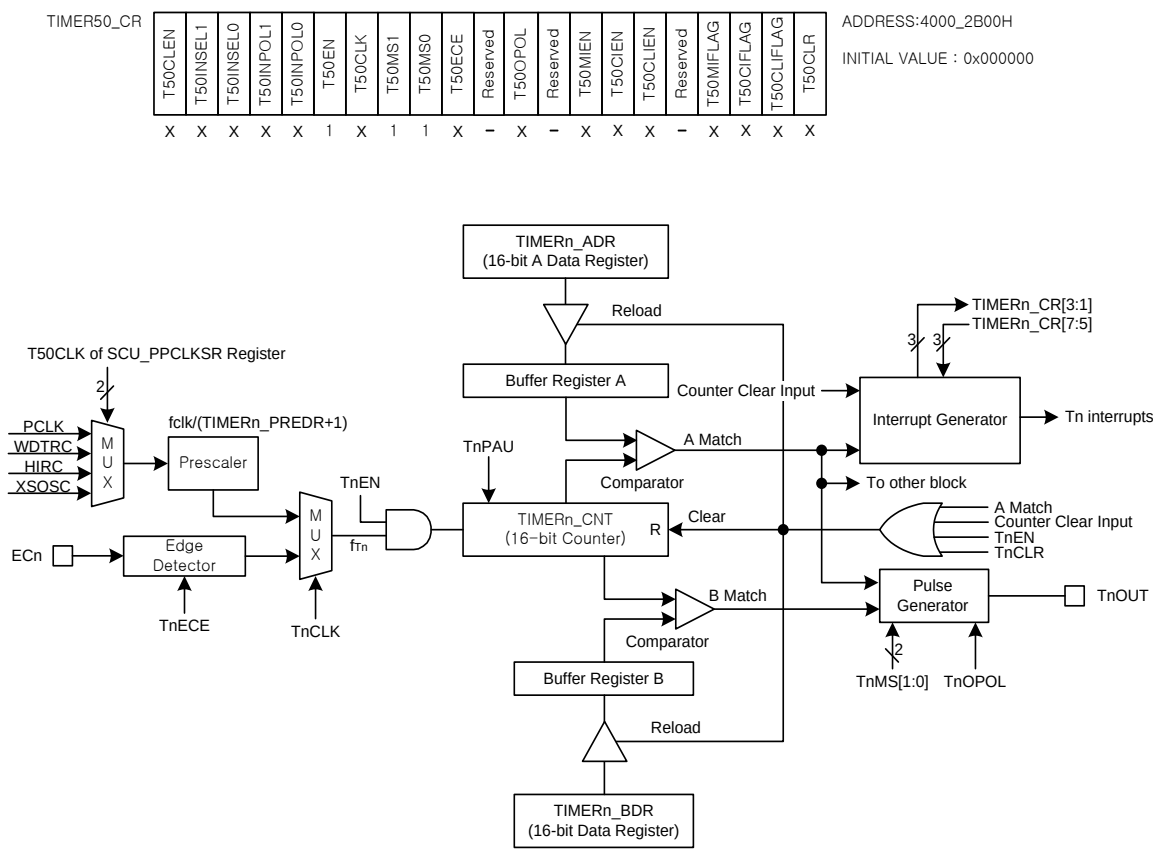

NOTE: The TnEN is automatically cleared to logic '0' after one pulse is generated in PPG one-shot mode.

Figure 51. 16-bit PPG Mode Timing Chart for Timer n (n = 50)

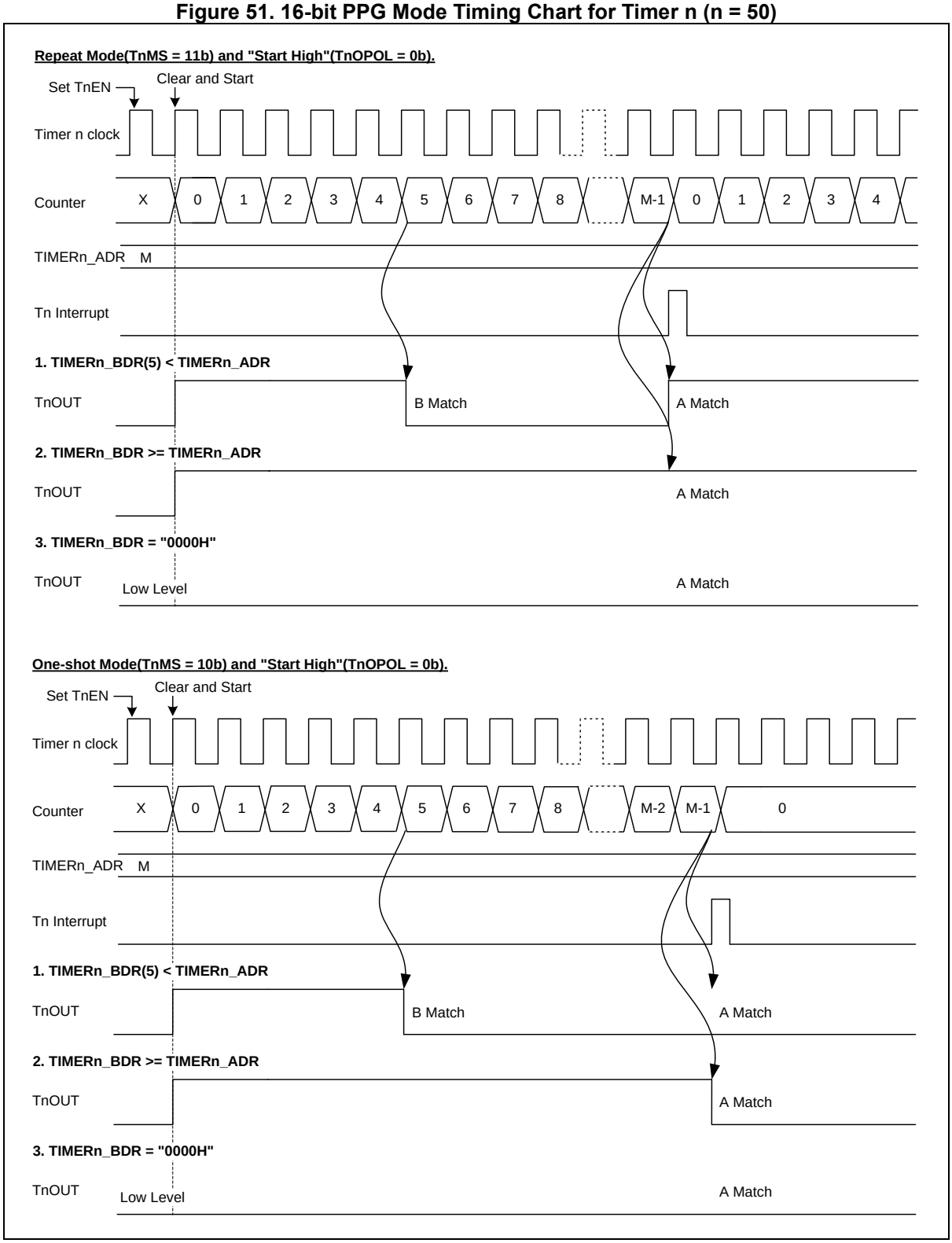

11.4.5 Counter clear input enable

TIMERn_CNT value can be automatically cleared by the “Counter clear input signal” when the “Counter clear input” is enabled by configuring TnCLEN as ‘1’. So, the TnOUT waveform can be modified by TnINP pin. (n = 50)

Figure 52. Timing Chart When “Counter Clear Input Enable” (n = 50)

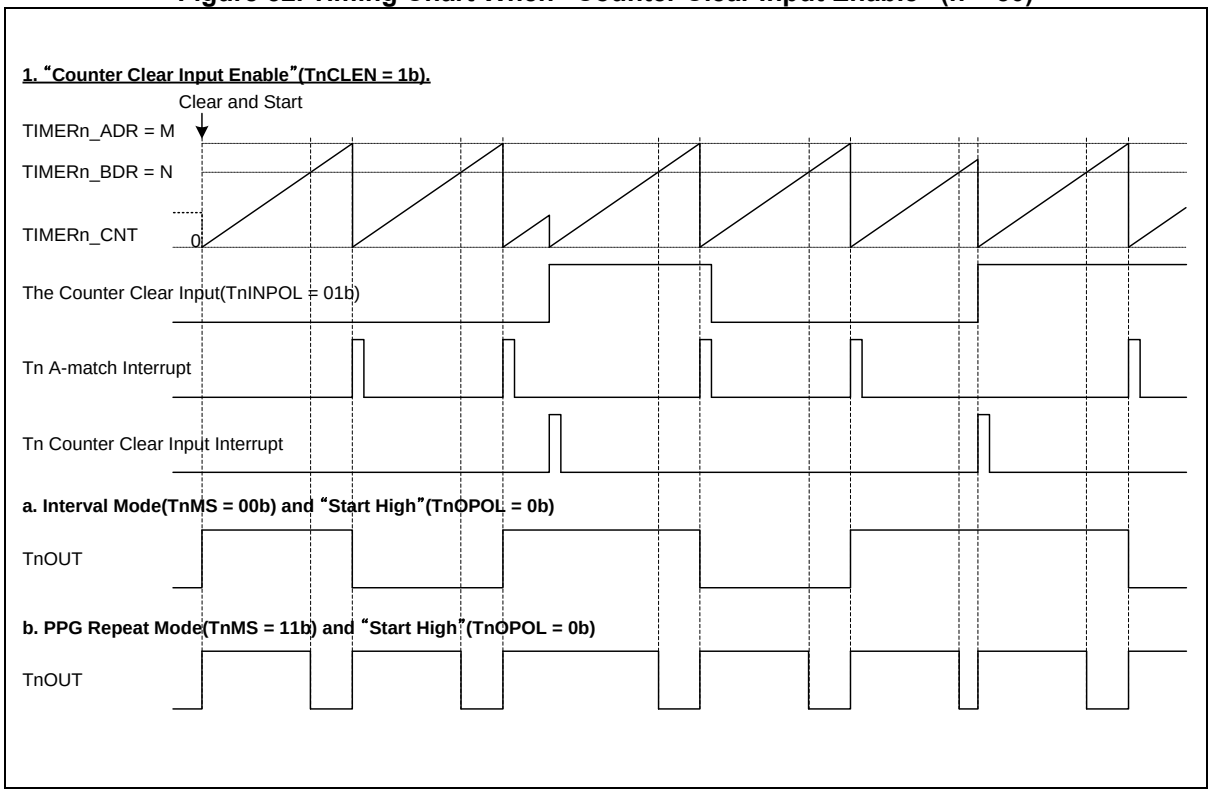

12 Timer counter 60

A timer block includes a single channel 16-bit general purpose timer. This timer has an independent 16-bit counter and 100Hz RC oscillator that feeds counting clock. It supports only a periodic timer.

Main purpose of this timer is to provide a wake-up source from DEEP SLEEP mode 3 (shutdown). The Timer counter 60 features the followings:

- 16-bit up-counter and interval timer mode
- Synchronous start and clear function
- Low power operation with an internal 100Hz RC oscillator

12.1 Timer counter 60 block diagram

Figure 53 shows the block diagram of the timer counter 60.

Figure 53. Timer Counter 60 Block Diagram

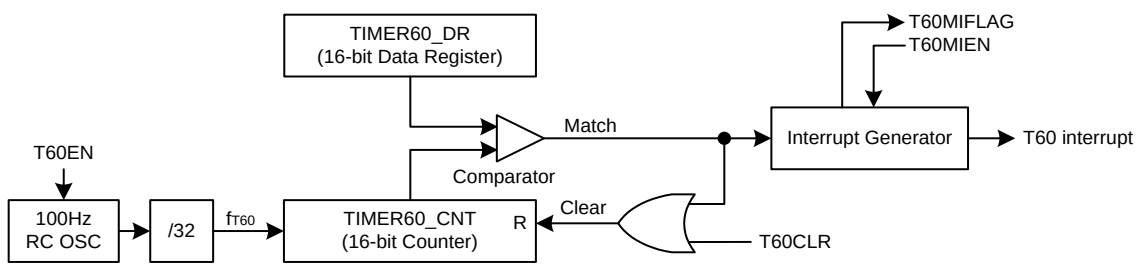

NOTES:

1. The TIMER60_DR register must be written while the timer counter 60 is disabled.
2. This timer is primarily intended to be used as a wake-up source in DEEP SLEEP mode 3 (shutdown).
3. When this timer is used in RUN mode, pay attention to the frequency deviation of 100Hz RC oscillator.

12.2 Registers

Base address and register map of the timer counter 60 block are shown in Table 48 and Table 49.

Table 48. Base Address of Timer 60

Name	Base address
TIMER60	0x4000_2F00

Table 49. Timer 60 Register Map

Name	Offset	Type	Description	Reset value
TIMER60_CR	0x0000	RW	Timer/Counter 60 Control Register	0x00000000
TIMER60_DR	0x0004	RW	Timer/Counter 60 Data Register	0x0000FFFF
TIMER60_CNT	0x0008	RO	Timer/Counter 60 Counter Register	0x00000000

12.2.1 TIMER60_CR: timer/counter 60 control register

TIMER60_CR register is 32-bit size and accessible in 32/16/8-bit. This register may not reset by wakeup in shutdown mode.

TIMER60_CR=0x4000_2F00

31 30 29 28 27 26 25 24	23 22 21 20 19 18 17 16	15	14	13	12	11	10	9	8	7	6	5	4	3	2	1	0
Reserved		T60EN	Reserved							T60MIEN	Reserved			T60MIFLAG	Reserved		T60CLR
0x0000		0	0	0	0	0	0	0	0	0	0	0	0	0	0	0	0
–		RW	-	-	-	-	-	-	-	RW	-	-	-	RW	-	-	RW

15	T60EN	Timer 60 Operation Enable.	
		0	Disable timer 60 operation and 100Hz RC oscillator
		1	Enable timer 60 operation and 100Hz RC oscillator
7	T60MIEN	Timer 60 Match Interrupt Enable.	
		0	Disable timer 60 match interrupt
		1	Enable timer 60 match interrupt
3	T60MIFLAG	Timer 60 Match Interrupt Flag.	
		0	No request occurred
		1	Request occurred. This bit is cleared to ‘0’ when write ‘1’.
0	T60CLR	Timer 60 Counter Clear.	
		0	No effect
		1	Clear timer 60 counter (Automatically cleared to “0b” after operation)

12.2.2 TIMER60_DR: timer/counter 60 data register

TIMER60_DR register is 32-bit size and accessible in 32/16/8-bit. This register may not reset by wakeup in shutdown mode.

TIMER60_DR=0x4000_2F04

31 30 29 28 27 26 25 24	23 22 21 20 19 18 17 16	15 14 13 12 11 10 9 8	7 6 5 4 3 2 1 0
Reserved		**DATA**	
0x0000		**0xFFFF**	
-		**RW**	

15 0	DATA	Timer/Counter 60 Data. The range is 0x0001 to 0xFFFF. Match time: (DATA[15:0]+1)÷fT60

12.2.3 TIMER60_CNT: timer/counter 60 counter register

TIMER60_CNT register is 32-bit size and accessible in 32/16/8-bit. This register may not reset by wakeup in shutdown mode.

TIMER60_CNT=0x4000_2F08

31 30 29 28 27 26 25 24	23 22 21 20 19 18 17 16	15 14 13 12 11 10 9 8	7 6 5 4 3 2 1 0
Reserved		**CNT**	
0x0000		**0x0000**	
-		**RO**	

15 0	CNT	Timer/Counter 60 Counter.

12.3 Functional description

The timer/counter 60 has an internal RC oscillator and its frequency is about 100Hz. Also, it is divided into 32 and input to a 16-bit counter.

Although the input frequency of timer/counter 60 has a large error rate, but the frequency is 3.125Hz (100Hz÷32) and it has a 16-bit counter. So, it is useful when SHUT DOWN mode for low power mode is required for a long time.

12.3.1 Timing diagram

The 16-bit counter of timer/counter 60 is incremented by 1 every rising edge of f_{T60} during the T60EN bit of TIMER60_CR register is set. The counter is cleared to 0x0000 by writing 1 to the T60CLR bit of TIMER60_CR register. When enabled for the first time after reset (System reset and timer 60 reset by the T60RST of SCU_PPRST1 register), the interrupt of T60 may occur 0.5 clock earlier with the T60 clock. Figure 54 shows timer/counter 60 timing diagram.

Figure 54. Timer/Counter 60 Timing Diagram

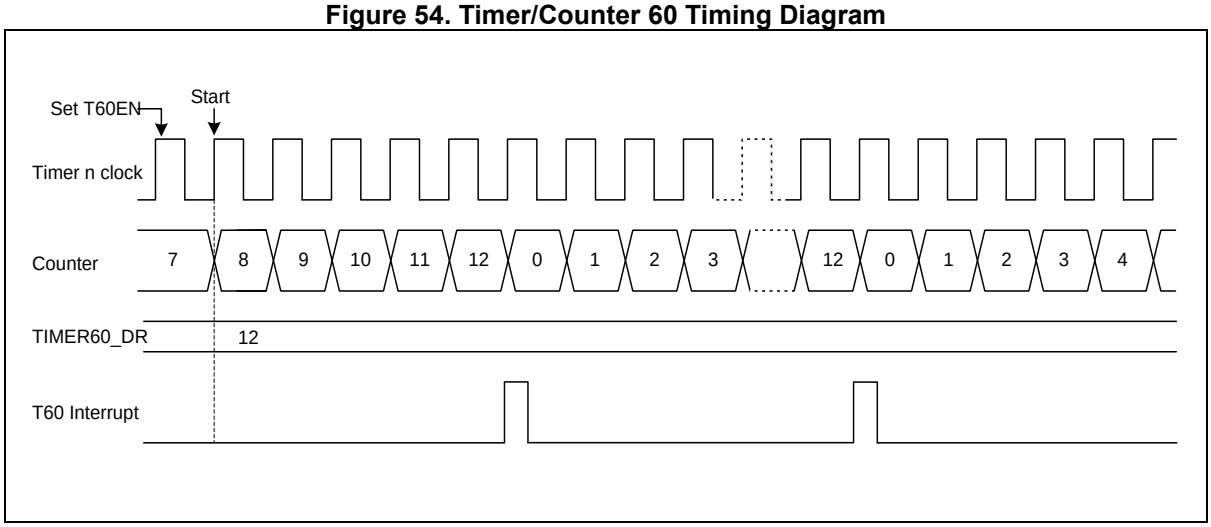

13 High speed 12-bit ADC

ADC (Analog-to-Digital Converter) of the A31L22x series allows conversion of an analog input signal to a corresponding 12-bit digital value. Its A/D module has eight analog inputs as shown in Figure 55. Output of the multiplexer is the input into the converter, which generates the result through successive approximation.

The A/D module has seven registers such as a control register (ADC_CR), a data register (ADC_DR), a prescaler data register (ADC_PREDR), an oversampling control register (ADC_OVSCR), an interrupt enable and status register (ADC_IESR), a sampling time register (ADC_SAMR), and a channel selection register (ADC_CHSELR). The A/D module supports single, sequential, and continuous conversion modes. Main features of the ADC are listed in the followings:

- 8-channel of analog inputs
- S/W (ADST), Timer trigger (T40/41/42/43 ADC trigger signal), and external trigger support
- Conversion time: Up to 2us with 12 clocks + at least 4 sample/hold clocks
- 4-bit Prescaler and 16-bit data registers
- Up to 256 over sampling
- Single, sequential, and continuous conversion mode

13.1 12-bit ADC block diagram

Figure 55 shows a block diagram of an ADC block.

Figure 55. 12-bit ADC Block Diagram

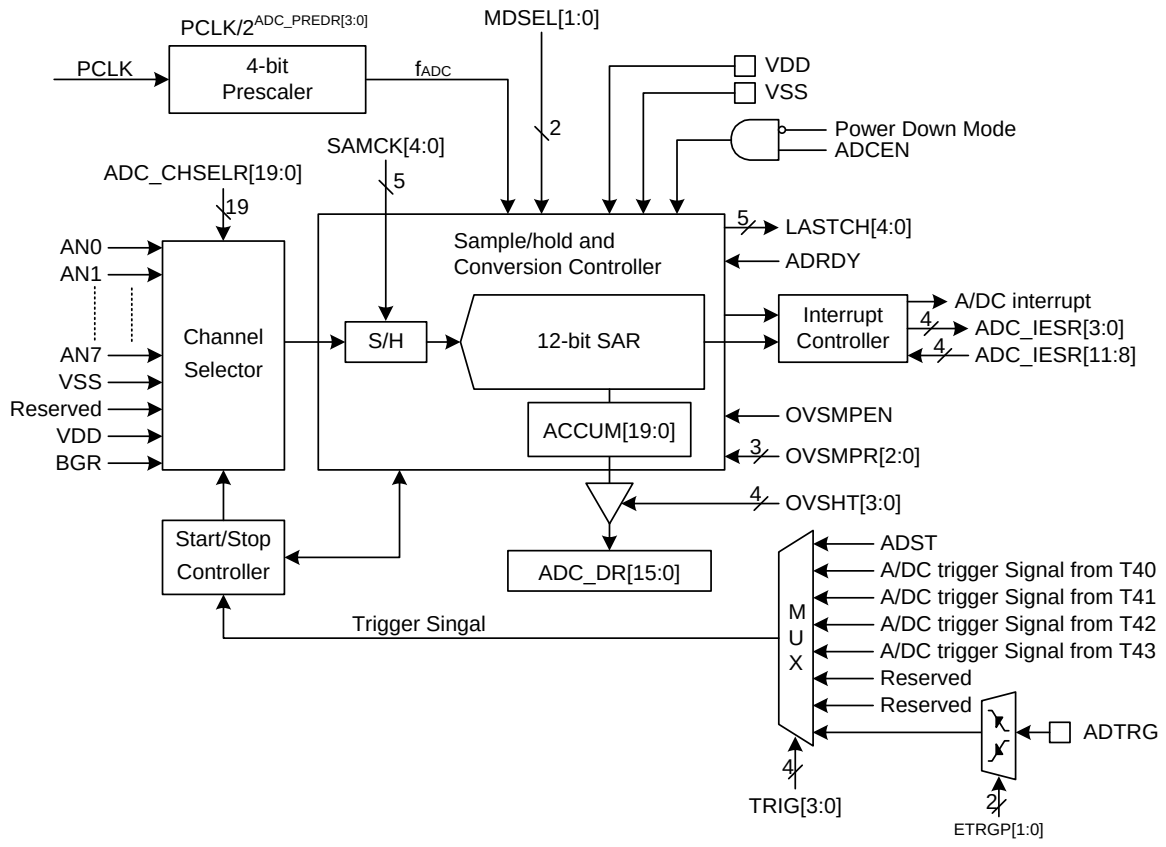

NOTE: The external trigger input, ADTRG, signal should be slower than a system clock frequency.

13.2 Pin description for 12-bit ADC

Table 50. Pins and External Signals for 12-bit ADC

Pin name	Type	Description
AN0	A	ADC Input 0
AN1	A	ADC Input 1
AN2	A	ADC Input 2
AN3	A	ADC Input 3
AN4	A	ADC Input 4
AN5	A	ADC Input 5
AN6	A	ADC Input 6
AN7	A	ADC Input 7

NOTE: Where A=Analog

13.3 Registers

Base address and register map of the ADC are shown in Table 51 and Table 52.

Table 51. Base Address of ADC

Name	Base address
ADC	0x4000_3000

Table 52. High Speed ADC Register Map

Name	Offset	Type	Description	Reset value
ADC_CR	0x0000	RW	A/D Converter Control Register	0x00000000
ADC_OVSCR	0x0004	RW	A/D Converter Oversampling Control Register	0x00000000
ADC_IESR	0x0008	RW	A/D Converter Interrupt Enable and Status Register	0x00000000
ADC_DR	0x000C	RO	A/D Converter Data Register	Unknown
ADC_PREDR	0x0010	RW	A/D Converter Prescaler Data Register	0x00000000
ADC_SAMR	0x0014	RW	A/D Converter Sampling Time Register	0x00000000
ADC_CHSELR	0x0018	RW	A/D Converter Channel Selection Register	0x00000000

13.3.1 ADC_CR: A/D converter control register

A/D Converter module should be configured properly before running.

ADC_CR register is 32-bit size and accessible in 32/16/8-bit.

ADC_CR=0x4000_3000

31 30 29 28 27 26 25 24	23 22 21 20 19 18 17 16	15	14	13	12	11	10	9	8	7	6	5	4	3	2	1	0
Reserved		ADCEN	Reserved		TRIG			ETRGP		ADRDY	Reserved		MDSEL		Reserved		ADST
0x0000		0	0	0	0	0	0	0	0	0	0	0	0	0	0	0	0
–		RW	-	-	RW	RW	RW	RW	RW	RW	-	-	RW	RW	-	-	RW

15	ADCEN	ADC Module Enable.
		0 Disable ADC module operation.
		1 Enable ADC module operation.
		NOTE: This ADC module is disabled in DEEP SLEEP mode.
12 10	TRIG	ADC Trigger Signal Selection.
		000 ADST.
		001 ADC trigger signal from timer 40.
		010 ADC trigger signal from timer 41.
		011 ADC trigger signal from timer 42.
		100 ADC trigger signal from timer 43.
		111 External ADC trigger input (ADTRG)
		OthersReserved
9 8	ETRGP	ADC External Trigger Input Polarity Selection.
		00 Disable ADC external trigger function
		01 Trigger on falling edge
		10 Trigger on rising edge
		11 Trigger on both of falling and rising edge
7	ADRDY	ADC Conversion Ready.
		0 Stop subsequent steps.
		1 Ready to convert.
4 3	MDSEL	ADC Conversion Mode Selection.
		00 Single conversion mode.
		01 Sequential conversion mode
		10 Continuous conversion mode
		11 Reserved.
0	ADST	ADC Conversion S/W Start. This bit is automatically cleared to ‘0’ after operation.
		0 No effect.
		1 S/W Trigger signal generation for conversion start.

13.3.2 ADC_OVSCR: A/D converter oversampling control register

ADC_OVSCR register is 32-bit size and accessible in 32/16/8-bit.

ADC_OVSCR=0x4000_3004

31	30	29	28	27	26	25	24	23	22	21	20	19	18	17	16	15	14	13	12	11	10	9	8	7	6	5	4	3	2	1	0
Reserved																OVSMPEN	Reserved							OVSMPR			Reserved	OVSHT			
0x0000																0	0	0	0	0	0	0	0	0	0	0	0	0	0	0	0
–																RW	-	-	-	-	-	-	-	RW	RW	RW	-	RW	RW	RW	RW

15	OVSMPEN	Oversampling Enable.	
		0	Disable oversampling.
		1	Enable oversampling.
7 5	OVSMPR	Oversampling Ratio Selection. Oversampling ratio: $2^{OVSMPR[2:0]+1}$, Ex) On OVSMPR[2:0] = 010b, 2^{2+1} = x8	
3 0	OVSHT	Oversampling Data Shift.	
		0000	No shift
		0001	Shift right 1-bit
		0010	Shift right 2-bit
		0011	Shift right 3-bit
		0100	Shift right 4-bit
		0101	Shift right 5-bit
		0110	Shift right 6-bit
		0111	Shift right 7-bit
		1000	Shift right 8-bit
		Others	reserved

13.3.3 ADC_IESR: A/D converter interrupt enable and status register

ADC_IESR register is 32-bit size and accessible in 32/16/8-bit.

ADC_IESR=0x4000_3008

31 30 29 28 27 26 25 24	23 22 21	20 19 18 17 16	15 14 13 12	11	10	9	8	7 6 5 4	3	2	1	0
Reserved	Reserved	LASTCH	Reserved	STBIEN	OVRUNIEN	EOCIEN	EOSIEN	Reserved	STBIFLAG	OVRUNIFLAG	EOCIFLAG	EOSIFLAG
0x00	0 0 0	0 0 0 0 0	0 0 0 0	0	0	0	0	0 0 0 0	0	0	0	0
–	– – –	RO RO RO RO RO	– – – –	RW	RW	RW	RW	– – – –	RW	RW	RW	RW

20 16	LASTCH	ADC Last Conversion Channel Number. The LASTCH[4:0] indicates the last converted channel number
11	STBIEN	ADC Stabilization Interrupt Enable. 0 Disable stabilization interrupt. 1 Enable stabilization interrupt.
10	OVRUNIEN	ADC Data Overrun Interrupt Enable. 0 Disable overrun interrupt. 1 Enable overrun interrupt.
9	EOCIEN	ADC End of Conversion Interrupt Enable. 0 Disable end of conversion interrupt 1 Enable end of conversion interrupt
8	EOSIEN	ADC End of Sequence Interrupt Enable. 0 Disable end of sequence interrupt. 1 Enable end of sequence interrupt.
3	STBIFLAG	ADC Stabilization Interrupt Flag. 0 No request occurred. 1 Request occurred. This bit is cleared to ‘0’ when ‘1’ is written. **NOTE**: This bit will be set to “1b” after about 16/f_{ADC} time when the ADC module is enabled by ADCEN bit. So, the ADC conversion should start after reviewing whether this bit is “1b”.
2	OVRUNIFLAG	ADC Data Overrun Interrupt Flag. 0 No request occurred. 1 Request occurred. This bit is cleared to ‘0’ when ‘1’ is written.
1	EOCIFLAG	ADC End of Conversion Interrupt Flag. 00 No request occurred. 01 Request occurred, This bit is cleared to ‘0’ when ‘1’ is written or the result data are read by s/w.
0	EOSIFLAG	ADC End of Sequence Interrupt Flag. 0 No request occurred. 1 Request occurred, This bit is cleared to ‘0’ when write ‘1’.

13.3.4 ADC_DR: A/D converter data register

ADC_DR register is 32-bit size and accessible in 32/16/8-bit.

ADC_DR=0x4000_300C

31 30 29 28 27 26 25 24	23 22 21 20 19 18 17 16	15 14 13 12 11 10 9 8	7 6 5 4 3 2 1 0
Reserved		**ADATA**	
0x0000		**0xXXXX**	
-		**RO**	

15 0	ADATA	A/D Converter Result Data. On OVSMPEN = 0 - ADATA[15:12] = 0x0 and ADATA[11:0] = 12-bit data converted On OVSMPEN = 1 - OVSHT[3:0] = 0: ACCUM[15:0] → ADATA[15:0] - OVSHT[3:0] = 1: ACCUM[16:1] → ADATA[15:0] - OVSHT[3:0] = 2: ACCUM[17:2] → ADATA[15:0] - OVSHT[3:0] = 3: ACCUM[18:3] → ADATA[15:0] - OVSHT[3:0] = 4: ACCUM[19:4] → ADATA[15:0] - OVSHT[3:0] = 5: ACCUM[19:5] → ADATA[15] = 0x0 and ADATA[14:0] - OVSHT[3:0] = 6: ACCUM[19:6] → ADATA[15:14] = 0x0 and ADATA[13:0] - OVSHT[3:0] = 7: ACCUM[19:7] → ADATA[15:13] = 0x0 and ADATA[12:0] - OVSHT[3:0] = 8: ACCUM[19:8] → ADATA[15:12] = 0x0 and ADATA[11:0]

NOTE: After waking up in power down mode, this data register is uncertain.

13.3.5 ADC_PREDR: A/D converter prescaler data register

ADC_PREDR register is 32-bit size and accessible in 32/16/8-bit.

ADC_PREDR=0x4000_3010

31 30 29 28 27 26 25 24	23 22 21 20 19 18 17 16	15 14 13 12 11 10 9 8	7 6 5 4	3	2	1	0
Reserved				**PRED**			
0x0000000				**0**	**0**	**0**	**0**
-				**RW**	**RW**	**RW**	**RW**

3 0	PRED	A/D Converter Prescaler Data. The prescaler sets the A/D conversion clock. The frequency of A/D converter should be less than or equal to 8MHz. The range is 0x0 to 0x8. $f_{ADC} = PCLK/2^{PRED[3:0]}$ Recommend Max. f_{ADC}: 8MHz If 1.71V ≤ VDD

13.3.6 ADC_SAMR: A/D converter sampling time register

ADC_SAMR register is 32-bit size and accessible in 32/16/8-bit.

ADC_SAMR=0x4000_3014

31 30 29 28 27 26 25 24	23 22 21 20 19 18 17 16	15 14 13 12 11 10 9 8	7	6	5	4	3	2	1	0
Reserved			Reserved			SAMCK				
0x000000			0	0	0	0	0	0	0	0
-			-	-	-	RW	RW	RW	RW	RW

4 0	SAMCK	Sampling cycles for sample/hold circuit. The range is 0x0 to 0x1E. Sampling cycles: SAMCK[4:0] + 2. Conversion cycles: 12.

13.3.7 ADC_CHSELR: A/D converter channel selection register

ADC_CHSELR register is 32-bit size and accessible in 32/16/8-bit.

ADC_CHSELR=0x4000_3018

31 30 29 28 27 26 25 24	23 22 21 20	19	18	17	16	15 14 13 12 11 10 9 8	7	6	5	4	3	2	1	0
Reserved	Reserved	AN19(BGR)	AN18(VDD)	Reserved	AN16(VSS)	Reserved	AN7	AN6	AN5	AN4	AN3	AN2	AN1	AN0
0x00	0 0 0 0	0	0	0	0	0x00	0	0	0	0	0	0	0	0
–	- - - -	RW	RW	-	RW	–	RW	RW	RW	RW	RW	RW	RW	RW

x	ANx	A/D Converter Channel Selection, x : 0 to 19
		0 ANx is not selected for conversion
		1 ANx is selected for conversion

NOTES:

1. This register should be not written on going conversion.
2. When entering DEEP SLEEP mode with ADC channel selected as AN19(BGR), the current increases a lot. So, the ADC_CHSELR.AN19(BGR) bit must be set to "0b" before entering DEEP SLEEP mode.

13.4 Functional description

13.4.1 ADC enable/disable control

A/D converter needs a stabilization time of about 16/f_{ADC}, t_{STAB}, before it starts converting. The following procedure is required for an ADC conversion.

1. Set the ADCEN bit of ADC_CR register to “1b” for enabling ADC module operation.
2. Wait until the STBIFLAG bit of ADC_IESR register is set to “1b”. The bit is set after the ADC stabilization time.
3. Set the ADRDY bit of ADC_CR register to “1b” for converting.

The following procedure is required to disable the ADC module.

1. Clear the ADRDY bit of ADC_CR register to “0b” for conversion stop.
2. Clear the ADCEN bit of ADC_CR register to “0b” for disabling ADC module operation.

Figure 56. ADC Enable/Disable Timing Chart

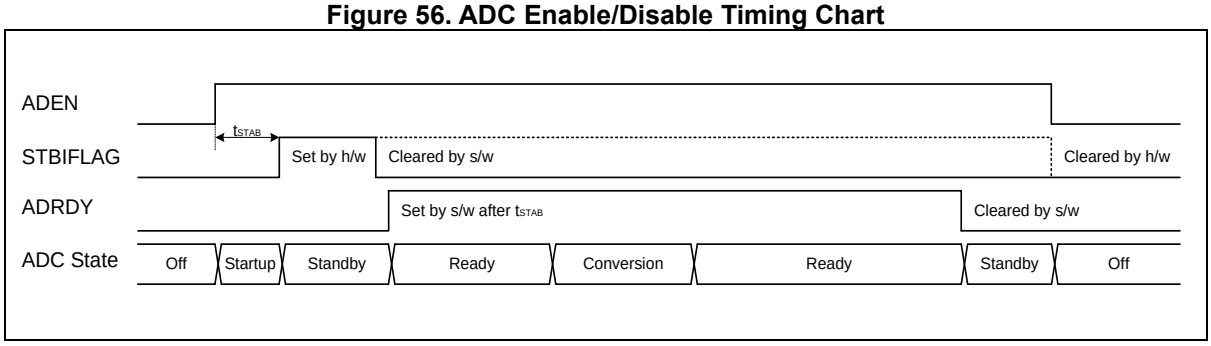

13.4.2 Channel selection

The ADC has 8 input channels from GPIO pins and 3 internal channels. It is possible to convert a single channel or to scan a sequence of channels. The channels to be converted should be programmed in the ADC_CHSELR register. The conversion order is always from AN0 to AN19.

13.4.3 ADC conversion timing

Conversion clock of the ADC is the sum of sampling and converting. The sampling clock is equal to the ADC_SAMR register + 2 and converting clock is always 12 clocks. The ADC clock should be set appropriately by the ADC_PREDR register according to the VDD voltage. In addition, the ADC_SAMR register must be set carefully for accurate conversion.

If the ADC_SAMR register has value of “0x2”, the sampling clock is 4 clocks. Since the converting clock is always 12 clocks, the conversion clock of the ADC is calculated as shown in the followings:

Conversion clock = (ADC_SAMR + 2) + 12 [clocks]

Table 53. ADC Frequency Set according to VDD

VDD Range	Max. f_{ADC}	ADC_PREDR (Ex: PCLK = 32MHz)
1.71V ≤ VDD ≤ 3.6V	Up to 8MHz	0x2 or more

NOTE: On low or high temperature, set the ADC frequency lower than the above table.

Figure 57. High Speed ADC Conversion Timing Chart

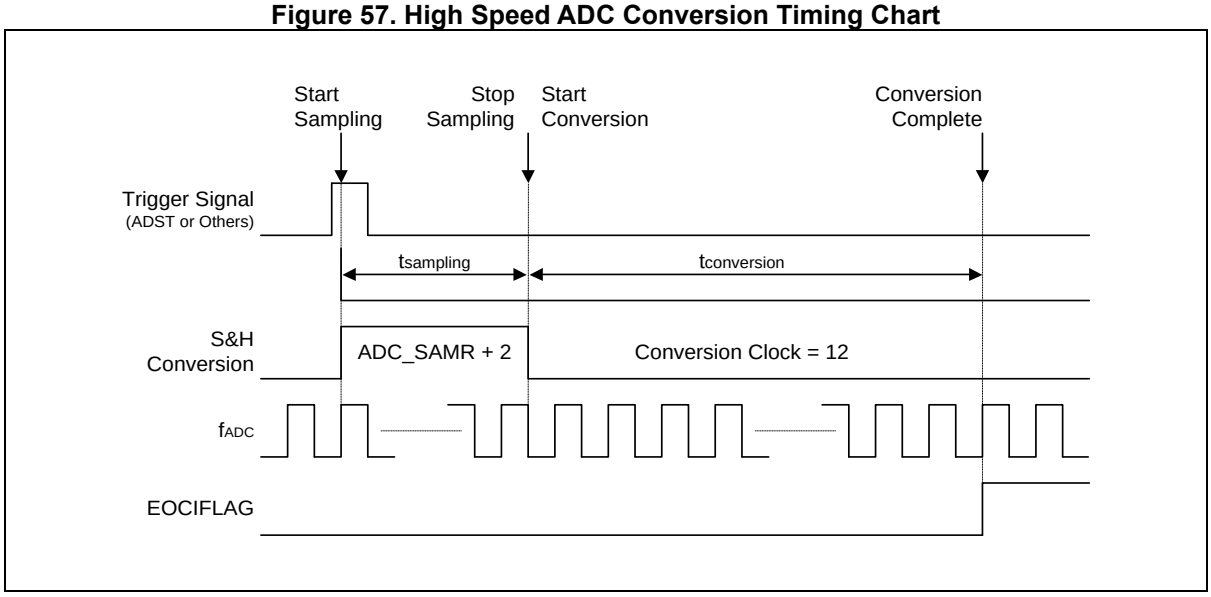

13.4.4 ADC conversion mode

There are three modes for ADC such as Single conversion mode, Sequential conversion mode and Continuous conversion mode. A mode is selected by the MDSEL[1:0] bits of ADC_CR register.

13.4.4.1 Single conversion mode

The ADC converts one of the selected channels in order every trigger signal during single conversion mode. Analog input signal is selected by ADC_CHSELR register.

The end of conversion interrupt flag, the EOCIFLAG bit of ADC_IESR register, is set to “1b” as soon as a new conversion data result is available. The EOCIFLAG bit is cleared by software by writing “1b” to it. An ADC data overrun interrupt flag is set to “1b” if a trigger finishes a new conversion while the previous conversion data are not read.

Figure 58. Example of Single Conversion Mode

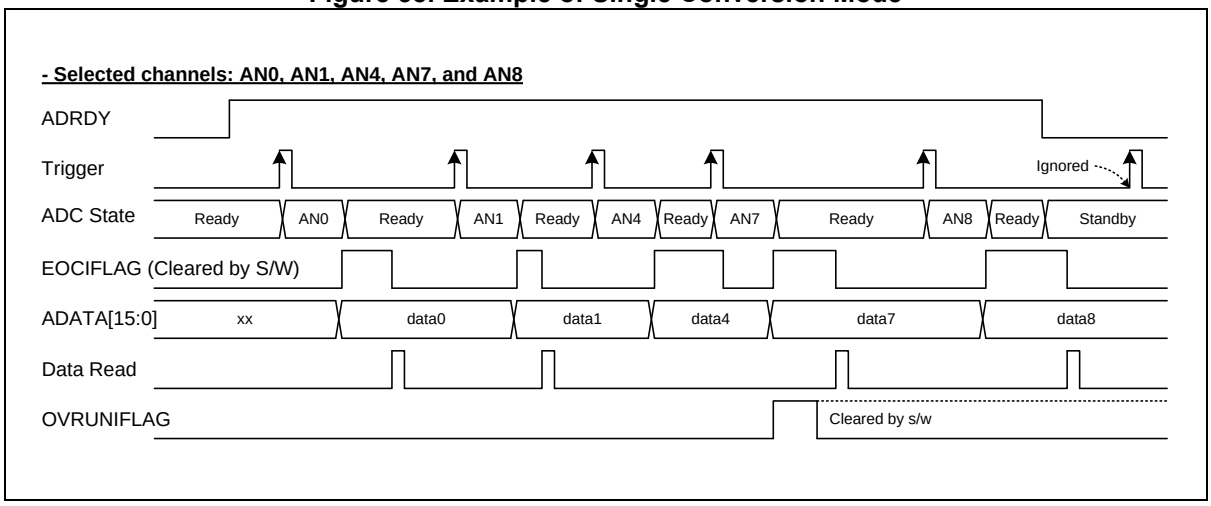

13.4.4.2 Sequential conversion mode

The ADC converts all selected channels in order by a trigger signal during Sequential conversion mode. All trigger signals are ignored during a sequence procedure. The next conversion starts immediately after data read.

The conversion sequence is terminated after all selected channels are converted. The end of sequence interrupt flag, the EOSIFLAG bit of ADC_IESR register, is set to “1b” as soon as the last data result of a sequence is available. The EOSIFLAG bit is cleared by software by writing “1b” to it.

Figure 59. Example of Sequential Conversion Mode

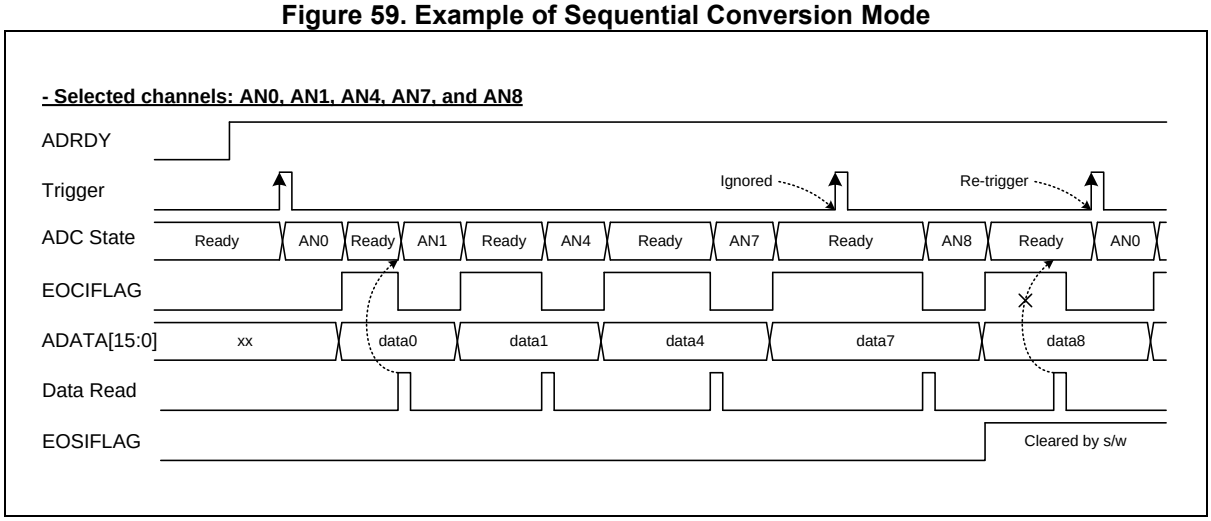

13.4.4.3 Continuous conversion mode

The ADC repeatedly converts all selected channels in order by a trigger signal during Continuous conversion mode. All trigger signals are ignored on the Continuous conversion mode. The next conversion starts immediately after data read as in the sequential conversion mode.

The end of sequence interrupt flag, the EOSIFLAG bit of ADC_IESR register, is also set to “1b” as soon as the last data result of a sequence is available, but the next conversion sequence is continued until a termination by software. The continuous conversion can be terminated by writing “0b” to the ADRDY bit of ADC_CR register.

Figure 60. Example of Continuous Conversion Mode

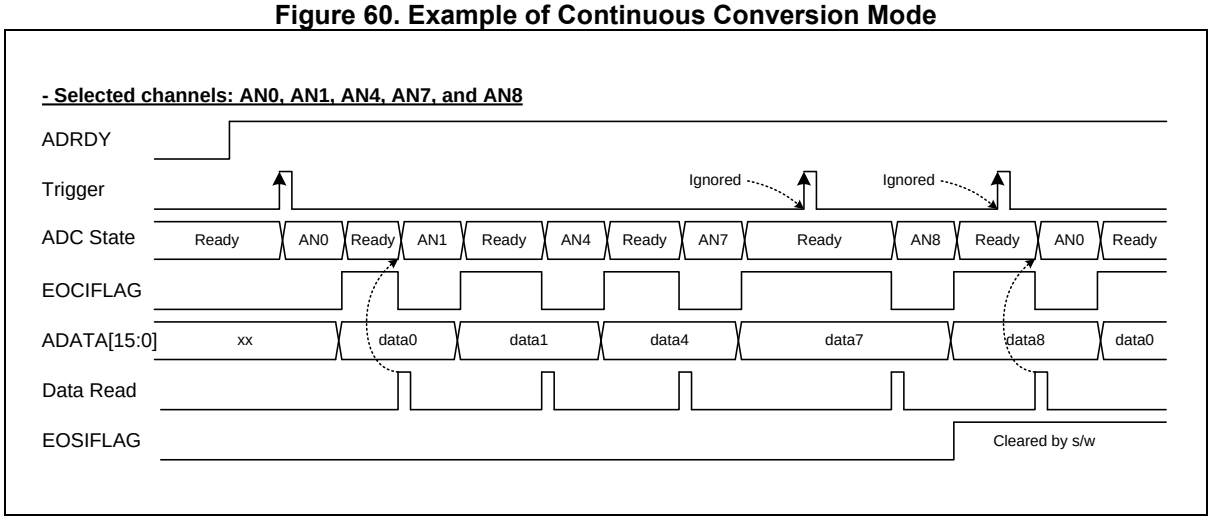

13.4.5 ADC oversampling

The ADC has oversampling function by hardware for averaging, SNR improvement, and filtering. The function can handle multiple conversions and average them into a single data width, up to 16-bit. The oversampling ratio is configured by the OVSMPR[2:0] bits of ADC_OVSCR register with enabling the oversampling. The range is from x2 to x256. The ADC block has 20-bit accumulator for all sums of sampling data (256 x 12-bit: 20-bit). The average result consists of a right bit shift up to 8-bit. The right bit shift is selected by the OVSHT[3:0] bits of ADC_OVSCR register.

$$\text{Average Result} = \sum_{n=1}^{n=2^{OVSMPR[2:0]+1}} Data_n \text{ >> OVSHT[3:0]}$$

The upper bits of the average result are truncated with only the 16 least significant bits before being transferred into the ADC_DR register.

Table 54. ADC Result Data

OVSMPEN	OVSHT[3:0]	ADC_DR Register															
		15	14	13	12	11	10	9	8	7	6	5	4	3	2	1	0
0	Don’t care	0	0	0	0	ADATA[11:0]											
1	0	ACCUM[15:0] → ADATA[15:0]															
1	1	ACCUM[16:1] → ADATA[15:0]															
1	2	ACCUM[17:2] → ADATA[15:0]															
1	3	ACCUM[18:3] → ADATA[15:0]															
1	4	ACCUM[19:4] → ADATA[15:0]															
1	5	0	ACCUM[19:5] → ADATA[14:0]														
1	6	0	0	ACCUM[19:6] → ADATA[13:0]													
1	7	0	0	0	ACCUM[19:7] → ADATA[12:0]												
1	8	0	0	0	0	ACCUM[19:8] → ADATA[11:0]											

13.4.6 ADC recommend circuit

An output resistor (Ro) of analog source increases the capacitor charging time of the circuit. It may degrade the accuracy of ADC. The charging time depends on the resistor and capacitor of an input circuit. So, the sampling time should be adjusted appropriately by the ADC sampling time register (ADC_SAMR). The interval time of conversion should also be adjusted for accuracy.

Figure 61. Recommend Circuit for ADC Input

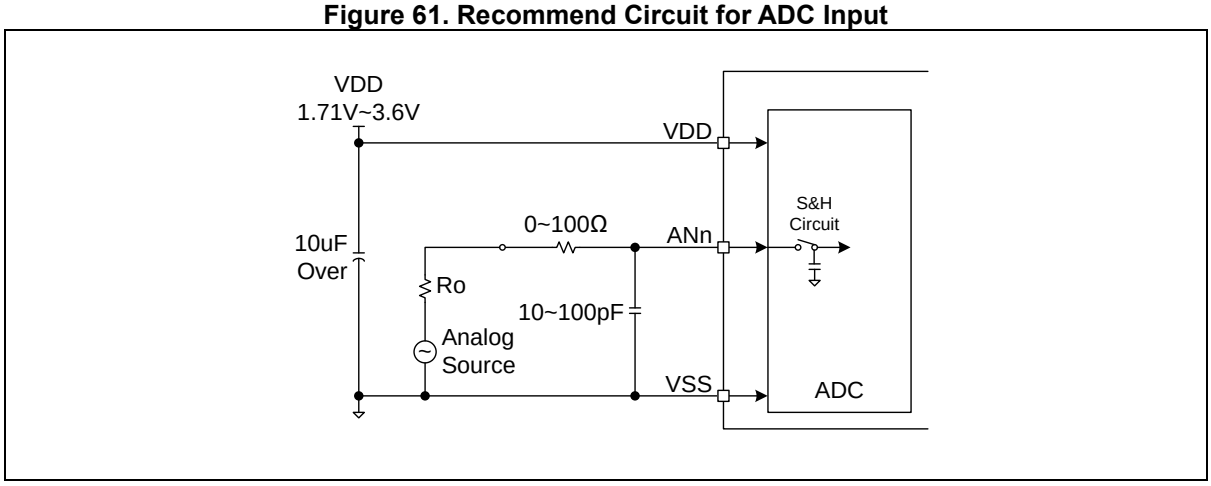

14 Comparator 0/1

The A31L22x series includes two comparator modules. Each comparator module has three registers such as a control register (CMP_CR), a status register (CMP_SR), and a reference control register (CMP_RCR). The comparator module has an internal reference circuit too.

The comparator module features the followings:

- External analog inputs
- Hysteresis function
- Low and fast speed selectable
- Wake-up possible from DEEP SLEEP mode

14.1 Comparator 0/1 block diagram

Figure 62 shows a block diagram of the comparator block.

Figure 62. Comparator 0/1 Block Diagram

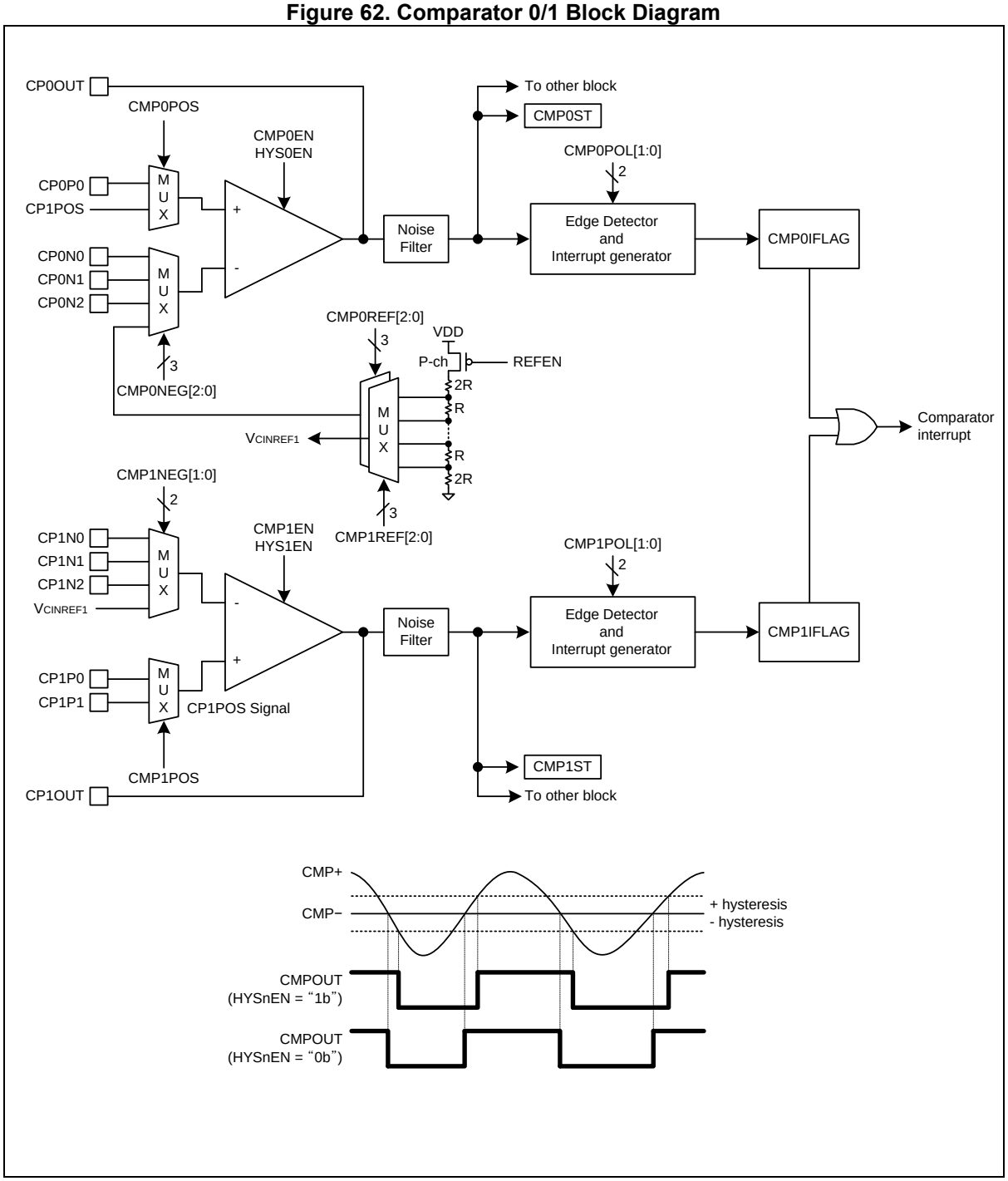

14.2 Pin description for Comparator 0/1

Table 55. Pins and External Signals for Comparator 0/1

Pin name	Type	Description
CP0P0	A	Comparator 0 positive input
CP0N0	A	Comparator 0 negative input
CP0N1	A	Comparator 0 negative input
CP0N2	A	Comparator 0 negative input
CP0OUT	A	Comparator 0 output
CP1P0	A	Comparator 1 positive input
CP1P1	A	Comparator 1 positive input
CP1N0	A	Comparator 1 negative input
CP1N1	A	Comparator 1 negative input
CP1N2	A	Comparator 1 negative input
CP1OUT	A	Comparator 1 output

14.3 Registers

Base address and register map of the Comparator 0/1 are shown in Table 56 and Table 57.

Table 56. Base Address of Comparator 0/1

Name	Base address	Size	Description
CMP0	0x4000_5600	128	Comparator 0
CMP1	0x4000_5680	128	Comparator 1

Table 57. Comparator n Register Map (n = 0 and 1)

Name	Offset	Type	Description	Reset value
CMPn_CR	0x0000	RW	Comparator n Control Register	0x00000000
CMPn_SR	0x0004	RW	Comparator n Status Register	0x00000000
CMPn_RCR	0x0008	RW	Comparator n Reference Control Register	0x00000000

14.3.1 CMPn_CR: comparator n control register

CMPn_CR register is 32-bit size and accessible in 32/16/8-bit. (n = 0 and 1)

CMP0_CR=0x4000_5600, CMP1_CR=0x4000_5680

31 30 29 28 27 26 25 24	23 22 21 20 19 18 17 16	15	14	13 12	11 10	9	8	7	6	5 4	3	2 1 0
Reserved		CMPnEN	Reserved	CMPnNEG	Reserved	CMPnPOS	HYSnEN	Reserved	CMPnSPD	CMPnPOL	Reserved	NFCKn
0x0000		0	0	0 0	0 0	0	0	0	0	0 0	0	0 0 0
–		RW	-	RW RW	- -	RW	RW	-	RW	RW RW	-	RW RW RW

15	CMPnEN	Comparator n Enable. (It isn't automatically disabled at power down)	
		0	Disable comparator n operation.
		1	Enable comparator n operation.
13 12	CMPnNEG	Comparator n Negative Input Selection.	
		00	Select external CPnN0 pin.
		01	Select external CPnN1 pin.
		10	Select external CPnN2 pin.
		11	Select internal reference.
9	CMPnPOS	Comparator n Positive Input Selection.	
		0	Select external CPnP0 pin.
		1	Select external CPnP1 pin (CP1POS signal on comparator 0).
8	HYSnEN	Comparator n Hysteresis Enable.	
		0	Disable hysteresis function.
		1	Enable hysteresis function.
6	CMPnSPD	Comparator n Speed Selection.	
		0	Slow speed.
		1	Fast speed.
5 4	CMPnPOL	Comparator n Interrupt Polarity Selection.	
		00	No interrupt at any edge.
		01	Interrupt on falling edge
		10	Interrupt on rising edge
		11	Interrupt on both of falling and rising edge
2 0	NFCKn	Comparator n Noise Filter Sampling Clock Selection.	
		000	PCLK/1
		001	PCLK/2
		010	PCLK/4
		011	PCLK/8
		100	PCLK/16
		101	PCLK/32
		110	PCLK/64
		111	Reserved

NOTES:

3. If a level is not detected three or more times in a row at the sampling clock, the signal is eliminated as noise.
4. A pulse level should be input for the duration of 3 clocks or more to be actually detected as a valid edge.
5. The comparator noise filter is automatically disabled at DEEP SLEEP mode and recovered after DEEP SLEEP mode release.

14.3.2 CMPn_SR: comparator n status register

CMPn_SR register is 32-bit size and accessible in 32/16/8-bit. (n = 0 and 1)

CMP0_SR=0x4000_5604, CMP1_SR=0x4000_5684

31 30 29 28 27 26 25 24	23 22 21 20 19 18 17 16	15 14 13 12 11 10 9 8	7	6	5	4	3	2	1	0
Reserved			Reserved			CMPnIFLAG	Reserved			CMPnST
0x000000			0	0	0	0	0	0	0	0
–			–	–	–	RW	–	–	–	RO

4	CMPnIFLAG	Comparator n Interrupt Flag.
		0 No request occurred.
		1 Request occurred, This bit is cleared to ‘0’ when write ‘1’.
0	CMPnST	Comparator n Output Status.
		0 Comparator n output is low.
		1 Comparator n output is high

14.3.3 CMPn_RCR: comparator n reference control register

CMPn_RCR register is 32-bit size and accessible in 32/16/8-bit. (n = 0 and 1)

CMP0_RCR=0x4000_5608, CMP1_RCR=0x4000_5688

31 30 29 28 27 26 25 24	23 22 21 20 19 18 17 16	15 14 13 12 11 10 9 8	7	6	5	4	3	2	1	0
Reserved			REFnEN	Reserved				CMPnREF		
0x000000			0	0	0	0	0	0	0	0
–			RW	–	–	–	–	RW	RW	RW

7	REFnEN	Comparator n Internal Reference Enable.
		0 Disable internal reference.
		1 Enable internal reference.
		NOTE: This bit is only in the comparator 0 reference control register (CMP0RCR).
2 0	CMPnREF	Comparator n Reference Voltage Level Selection.
		000 Select reference voltage level 0
		001 Select reference voltage level 1
		010 Select reference voltage level 2
		011 Select reference voltage level 3
		100 Select reference voltage level 4
		101 Select reference voltage level 5
		110 Select reference voltage level 6
		111 Select reference voltage level 7
		NOTE: Reference voltage = (2+k)xVDD÷11, k: 0 to 7

15 USART 10

USART (Universal Synchronous and Asynchronous serial Receiver and Transmitter) is a highly flexible serial communication device. The USART of the A31L22x series features the followings:

- Full Duplex Operation. (Independent Serial Receive and Transmit Registers)
- Asynchronous or Synchronous Operation
- Baud Rate Generator
- Supports Serial Frames with 5,6,7,8, or 9 Data bits and 1 or 2 Stop bits
- Odd or Even Parity Generation, and Parity Check Supported by Hardware.
- Supports Receive Character Detection and Receive Time Out Function
- Supports Local Interconnection Network (LIN)
- Data OverRun Detection
- Framing Error Detection
- Three Separate Interrupts on TX Completion, TX Data Register Empty and RX Completion
- Double Speed Asynchronous communication mode
- Up to 16MHz data transfer for SPI

15.1 USART 10 block diagram

Figure 63 shows a block diagram of the UART and LIN block.

Figure 63. UART and LIN Block Diagram of USART (n = 10)

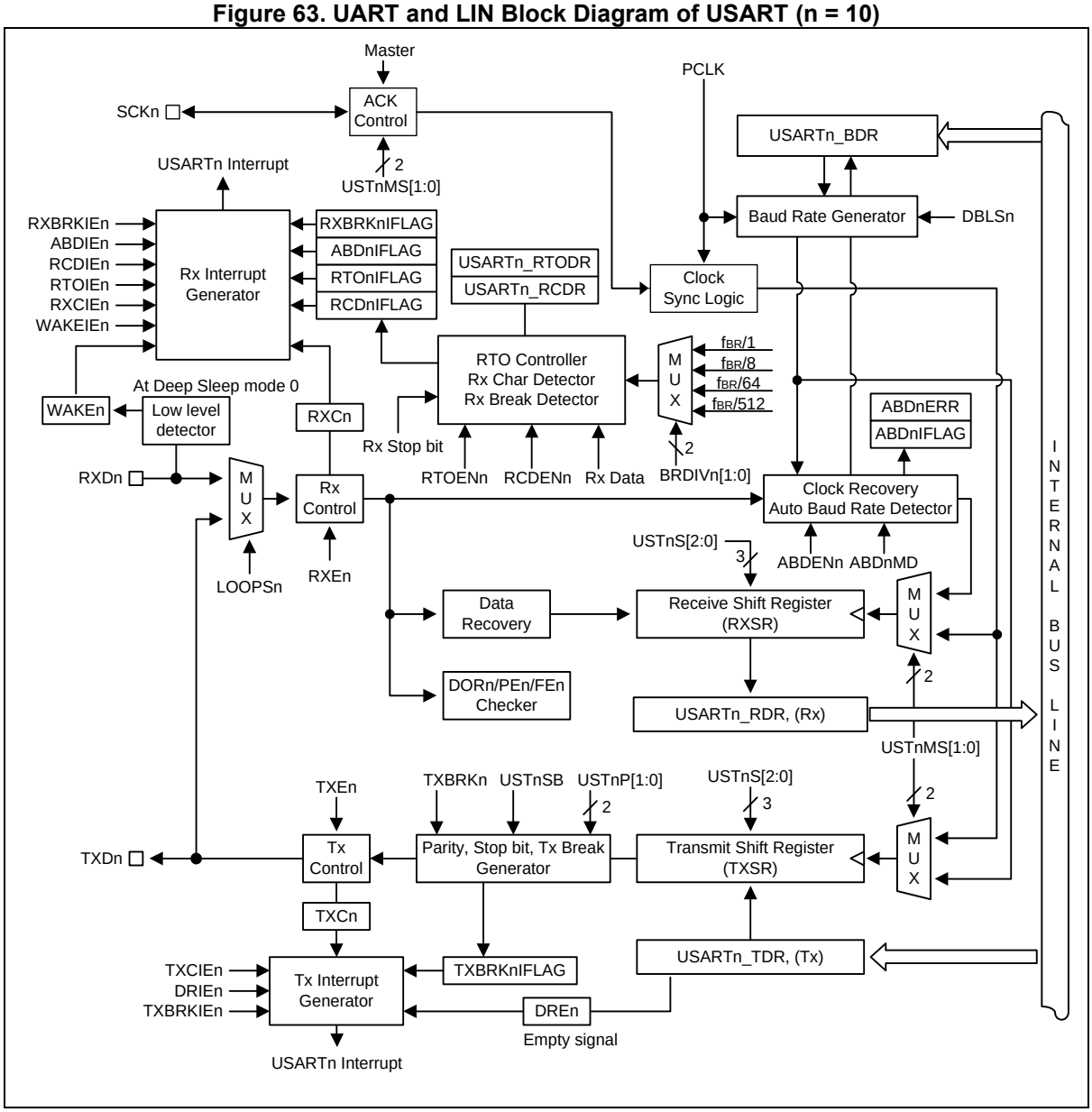

Figure 64 shows a block diagram of the SPI block.

Figure 64. SPIn Block Diagram of USART (n = 10)

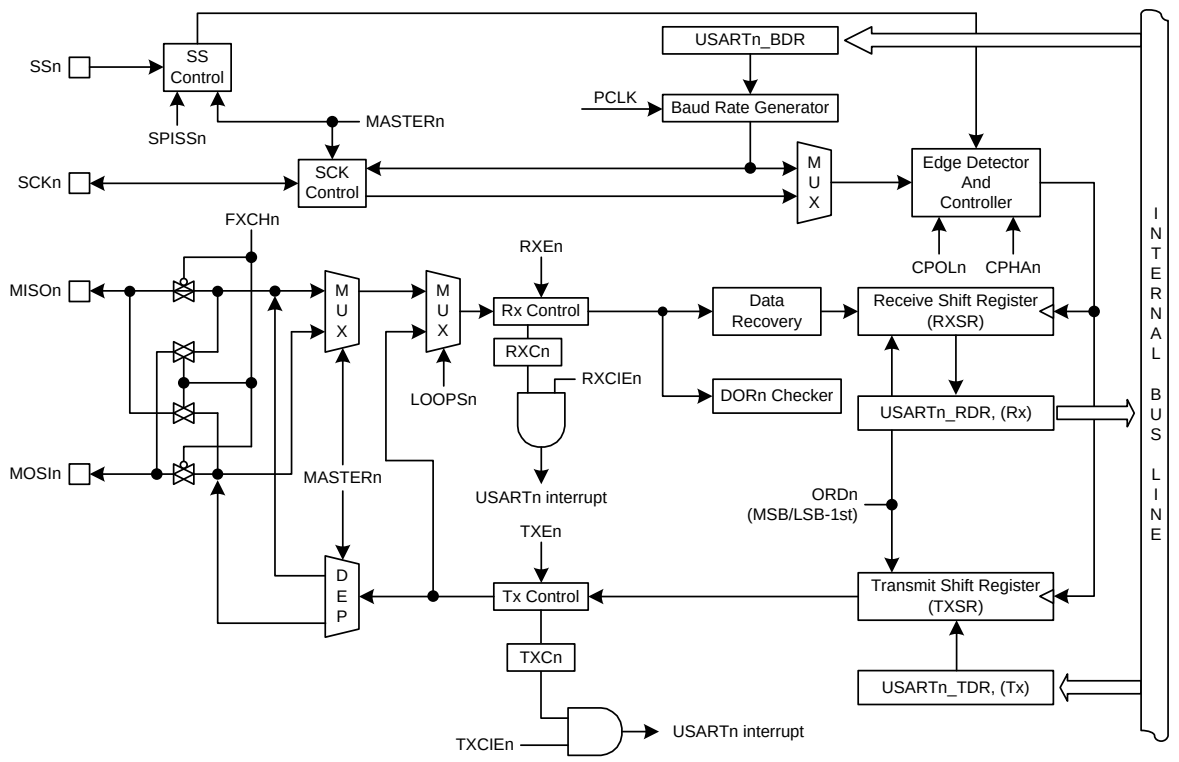

NOTES:

1. The clock frequency of SCKn should be less than or equal to PCLK/2.

15.2 Pin description for USART 10

Table 58. Pins and External Signals for USART 10 (n = 10)

Pin name	Type	Description
TXDn	O	UART Channel n transmit output
RXDn	I	UART Channel n receive input
SSn	I/O	SPIn Slave select input /output
SCKn	I/O	SPIn Serial clock input/output
MOSIn	I/O	SPIn Serial data (Master output, Slave input)
MISOn	I/O	SPIn Serial data (Master input, Slave output)

15.3 Registers

Base address and register map of the USART 10 are shown in Table 59 and Table 60.

Table 59. Base Address of USART 10

Name	Base address	Size	Description
USART 10	0x4000_3800	256	USART 10 block (UART 10 + SPI 10)

Table 60. USART n Register Map (n = 10)

Name	Offset	Type	Description	Reset value
USARTn_CR1	0x00	RW	USARTn control register 1	0x00000000
USARTn_CR2	0x04	RW	USARTn control register 2	0x00000000
USARTn_CR3	0x08	RW	USARTn control register 3	0x00000000
USARTn_ST	0x0C	RW	USARTn status register	0x00000080
USARTn_BDR	0x10	RW	USARTn baud rate generation register	0x00000FFF
USARTn_RDR	0x14	RO	USARTn receive data register	0x00000000
USARTn_TDR	0x18	RW	USARTn transmit data register	0x00000000
USARTn_RTODR	0x1C	RW	USARTn receive time out data register	0x000000FF
USARTn_RCDR	0x20	RW	USARTn receive character detection data register	0x00000000

15.3.1 USARTn_CR1: USARTn control register 1

USART module should be configured properly before running.

USARTn_CR1 register is 32-bit size and accessible in 32/16/8-bit. (n = 10)

USART10_CR1=0x4000_3800

31 30 29 28 27 26 25 24	23 22 21 20 19 18 17 16	15	14	13	12	11	10	9	8	7	6	5	4	3	2	1	0
Reserved		USTnMS		USTnP		USTnS			ORDn	CPOLn	CPHAn	DRIEn	TXCIEn	RXCIEn	WAKEIEn	TXEn	RXEn
0x0000		00		00		000			0	0	0	0	0	0	0	0	0
-		RW		RW		RW			RW	RW	RW	RW	RW	RW	RW	RW	RW

15 14	USTnMS	USARTn Operation Mode Selection. 00 Asynchronous Mode. (UART) 01 Synchronous Mode. 10 Local Interconnection Network (LIN) 11 SPI mode **NOTE**: The LIN transmission is fixed as “Start, D0, D1, D2, D3, D4, D5, D6, D7, Stop1”. So, the USTnP[1:0], LOOPSn, and USTnSB bits must be cleared to ‘0’ and the USTnS[2:0] bits should be set to “011b”.
13 12	USTnP	Selects Parity Generation and Check method. (only UART mode) 00 No parity. 01 Reserved. 10 Even parity. 11 Odd parity.
11 9	USTnS	Selects the length of data bit in a frame at Asynchronous or Synchronous mode. 000 5 bit. 001 6 bit. 010 7 bit. 011 8 bit. 111 9 bit. Others Reserved.
8	ORDn	Selects the first data bit to be transmitted. (only SPI mode) 0 LSB-first. 1 MSB-first.
7	CPOLn	Selects the clock polarity of SCK in synchronous or SPI mode. 0 SCK to 0 when idle. 1 SCK to 1 when idle.
6	CPHAn	CPOLn and this bit determine if data are sampled on the leading or the trailing edge of SCK. (only SPI mode) CPOLn CPHAn Leading edge Trailing edge 0 0 Sample (Rising) Setup (Falling) 0 1 Setup (Rising) Sample (Falling) 1 0 Sample (Falling) Setup (Rising) 1 1 Setup (Falling) Sample (Rising)
5	DRIEn	Transmit Data Register Empty Interrupt Enable. 0 Disable transmit data empty interrupt. 1 Enable transmit data empty interrupt.
4	TXCIEn	Transmit Complete Interrupt Enable. 0 Disable transmit complete interrupt. 1 Enable transmit complete interrupt.
3	RXCIEn	Receive Complete Interrupt Enable. 0 Disable receive complete interrupt. 1 Enable receive complete interrupt.
2	WAKEIEn	Asynchronous Wake-up Interrupt Enable in DEEP SLEEP Mode. When the device is in DEEP SLEEP mode, if RXDn goes to low level, an interrupt can be requested to wake-up system (only UART and LIN mode). This bit should be cleared to ‘0’ to receive Rx data.

		0	Disable asynchronous wake-up interrupt.
		1	Enable asynchronous wake-up interrupt. (Only used for wake-up)
1	TXEn	Enables the Transmitter unit.	
		0	Transmitter is disabled.
		1	Transmitter is enabled.
0	RXEn	Enables the Receiver unit.	
		0	Receiver is disabled.
		1	Receiver is enabled.

NOTE: The CPOLn and CPHAn bits should be changed while TXEn and RXEn bits are ‘0’.

15.3.2 USARTn_CR2: USARTn control register 2

USART module should be configured properly before running.

USARTn_CR2 register is 32-bit size and accessible in 32/16/8-bit. (n = 10)

USART10_CR2=0x4000_3804

31 30 29 28 27 26 25 24	23 22 21 20 19 18 17 16	15 14 13 12 11 10	9	8	7	6	5	4	3	2	1	0
Reserved			USTnEN	DBLSn	MASTERn	LOOPSn	DISSCKn	USTnSSEN	FXCHn	USTnSB	Reserved	
0x00000			0	0	0	0	0	0	0	0	0	0
-			RW	RW	RW	RW	RW	RW	RW	RW	-	-

9	USTnEN	Enable USARTn block. This bit can be cleared to ‘0b’ during the corresponding TXEn and RXEn bits are all ‘0b’. **NOTE**: This bit should be set to “1b” after setting the related registers.
	0	Disable USARTn block.
	1	Enable USARTn block.
8	DBLSn	Selects receiver sampling rate. (only asynchronous and LIN mode)
	0	Normal asynchronous operation.
	1	Double speed asynchronous operation.
7	MASTERn	Selects master or slave in SPIn or Synchronous mode and controls the direction of SCKn pin.
	0	Slave operation. (External clock for SCKn)
	1	Master operation. (Internal clock for SCKn)
6	LOOPSn	1. 1-wire Half-Duplex Communication on Asynchronous Mode.
	0	Normal operation.
	1	1-wire half-duplex communication (The TXD and RXD lines are internally connected, the RXD pin is not used, and the TXD pin is always an input when no transmitted. So, the TXD pin must be configured to open-drain with an external pull-up resistor)
	2. Loop Back for Test on SPI and Synchronous Mode	
	0	Normal operation.
	1	Loop back (The “MOSI and MISO”/”TXD and RXD” lines are internally connected and the receive input is not used).
5	DISSCKn	In synchronous mode operation, selects the waveform of SCKn output.
	0	SCKn is free-running while USARTn is enabled in synchronous master mode.
	1	SCKn is active while any frame is transferring.
4	USTnSSEN	This bit controls the SSn pin operation. (only SPI mode)
	0	Disable.
	1	Enable. (The SS pin should be configured as an alternative function)
3	FXCHn	SPIn port function exchange control. (only SPI mode)
	0	No effect.
	1	Exchange MOSIn and MISOn function.
2	USTnSB	Selects the length of stop bit in Asynchronous or Synchronous mode.
	0	1 Stop bit.
	1	2 Stop bit.

15.3.3 USARTn_CR3: USARTn control register 3

USART module should be configured properly before running. This register is used only for UART and LIN mode. USARTn_CR3 register is 32-bit size and accessible in 32/16/8-bit. (n = 10)

USART10_CR3=0x4000_3808

31 30 29 28 27 26 25 24	23	22	21	20	19	18	17	16	15	14	13	12	11	10	9	8	7	6	5	4	3	2	1 0
Reserved	RXBRKn	TXBRKn	RXBRKIEn	TXBRKIEn	RXBRKnIFLAG	TXBRKnIFLAG	Reserved	ABDENn	ABDnMD	ABDIEn	ABDnIFLAG	ABDnERR	Reserved	RCDENn	RTOENn	Reserved	RCDIENn	RTOIENn	Reserved	RCDnIFLAG	RTOnIFLAG	Reserved	BRDIVn
0x00	0	0	0	0	0	0	0	0	0	0	0	0	0	0	0	0	0	0	0	0	0	0	00
-	RW	RW	RW	RW	RW	RW	-	RW	RW	RW	RW	RW	-	RW	RW	-	RW	RW	-	RW	RW	-	RW

23 RXBRKn	Rx Break Field Length (Only LIN mode)	
	0	10 ‘0’ bits or more
	1	11 ‘0’ bits or more
22 TXBRKn	Tx Break Field (Only LIN mode)	
	0	No effect
	1	Transmit Tx break (13 ‘0’ bits + 2 ‘1’ bits, 000000000000011b, automatically cleared)
21 RXBRKIEn	Rx Break Field Detection Interrupt Enable bit (Only LIN mode)	
	0	Disable Rx break detection interrupt
	1	Enable Rx break detection interrupt
20 TXBRKIEn	Tx Break Field Completion Interrupt Enable bit (Only LIN mode)	
	0	Disable Tx break completion interrupt
	1	Enable Tx break completion interrupt
19 RXBRKnIFLAG	Rx Break Field Detection Interrupt flag. This bit is set when LIN break is detected.	
	0	No request occurred
	1	Request occurred. This bit is cleared to ‘0’ when write ‘1’.
18 TXBRKnIFLAG	Tx Break Field Completion Interrupt flag. This bit is set when Tx break field is completely transmitted.	
	0	No request occurred
	1	Request occurred. This bit is cleared to ‘0’ when write ‘1’.
16 ABDENn	Auto Baud Rate Detection Enable bit.	
	0	Disable auto baud rate detection
	1	Enable auto baud rate detection (This bit is automatically cleared after operation)
	NOTE: In the LIN mode, the Rx break field may not be detected while this bit is “1b”. So, it is recommended to set this bit to “1b” for auto baud rate detection after the Rx break field detection.	
15 ABDnMD	Auto Baud Rate Detection Mode	
	0	Mode 0, The start bit is used to measure the baud rate (The 1ST bit must be “1b”)
	1	Mode 1, The 0x55 character is used to measure the baud rate detection
14 ABDIEn	Auto Baud Rate Detection Interrupt Enable bit	
	0	Disable auto baud rate detection interrupt
	1	Enable auto baud rate detection interrupt
13 ABDnIFLAG	Auto Baud Rate Detection Interrupt Flag. This bit is set to “1b” when the auto baud rate detection finishes, whether an error occurs or not.	
	0	No request occurred
	1	Request occurred. This bit is cleared to ‘0’ when ‘1’ is written
12 ABDnERR	Auto Baud Rate Detection Error bit. This bit is set to “1b” if the clock counting values are not between 16 and 65536 on the normal speed operation (DBLSn = 0) or between 8 and 32768 on the double speed operation (DBLSn = 1).	
	0	No error occurs

		1 An error occurs. This bit is cleared to ‘0’ when write ‘1’.
		NOTE: If an error occurs, the USARTn_BDR register will not be updated.
10	RCDENn	Receive Character Detection Function Enable bit. This function is to compare the value of USARTn_RCDR register with the value just received.
		0 Disable receive detection function.
		1 Enable receive detection function.
9	RTOENn	Receive Time Out Function Enable bit. This function is to count time with baud rate units from the leading edge of a start bit to a new start bit. The receive time out controller counts down from the value of USARTn_RTODR register every start bit and set this bit. The RTOnIFLAG bit is set to “1b” at the counter underflow (only asynchronous mode).
		0 Disable receive time out function.
		1 Enable receive time out function.
7	RCDIEn	Receive Character Detection Interrupt Enable.
		0 Disable receive character detection interrupt
		1 Enable receive character detection interrupt
6	RTOIEn	Receive Time Out Interrupt Enable.
		0 Disable receive time out interrupt.
		1 Enable receive time out interrupt
4	RCDnIFLAG	Receive Character detection Interrupt Flag. This bit is set to “1b” if the value in the USARTn_RCDR register matches the value received in the non-error state of frame and parity. On match of them, the bit may be set even if data overrun occurs.
		0 No request occurred.
		1 Request occurred. This bit is cleared to ‘0’ when ‘1’ is written.
3	RTOnIFLAG	Receive Time Out Interrupt Flag
		0 No request occurred.
		1 Request occurred. This bit is cleared to ‘0’ when ‘1’ is written.
1 0	BRDIVn	Baud Rate Clock Dividing Selection for Receive Time Out. (only asynchronous and LIN mode).
		00 $f_{BR}/1$.
		01 $f_{BR}/8$
		10 $f_{BR}/64$
		11 $f_{BR}/512$

15.3.4 USARTn_ST: USARTn status register

USARTn_ST register is 32-bit size and accessible in 32/16/8-bit. (n = 10)

USART10_ST=0x4000_380C

31 30 29 28 27 26 25 24	23 22 21 20 19 18 17 16	15 14 13 12 11 10 9 8	7	6	5	4	3	2	1	0
Reserved			DREn	TXCn	RXCn	WAKEn	Reserved	DORn	FEn	PEn
0x000000			1	0	0	0	0	0	0	0
-			RO	RW	RO	RW	-	RW	RW	RW

7	DREn	Transmit Data Register Empty Interrupt Flag. The flag is set to “1b” when the data in the USARTn_TDR register has been transferred to the transmit shift register. This bit is cleared by a write to the USARTn_TDR register (only UART mode). 0 Not transferred to the transmit shift register. 1 Transferred to the transmit shift register.
6	TXCn	Transmit Complete Interrupt Flag. This flag is set to “1b” when the data in the transmit shift register has been shifted out and when the DREn = 1. 0 No request occurred. 1 The data in the transmit shift register are shifted out completely. This bit is cleared to ‘0’ when write ‘1’.
5	RXCn	Receive Data Register Not Empty Interrupt Flag. This bit is set to “1b” when the data in the receive shift register has been transferred to the USARTn_RDR register. The bit is cleared by a read to the USARTn_RDR register. 0 No request occurred. 1 There is data in the receive data register. This bit is cleared to ‘0’ when write ‘1’.
4	WAKEn	Asynchronous Wake-up Interrupt Flag. This flag is set when the RXD pin is detected low while the CPU is in DEEP SLEEP mode (only UART mode) 0 No request occurred. 1 Request occurred. This bit is cleared to ‘0’ when write ‘1’.
2	DORn	Data Overrun bit. This bit is set when the receive shift register is transferred to the USARTn_RDR register while the RXCn=1. The data of the shift register are ignored. This bit must be cleared by S/W to receive new data (only UART mode). 0 No Data OverRun. 1 Data overrun detected. This bit is cleared to ‘0’ when write ‘1’.
1	FEn	Frame Error bit. This bit is set when the received data have not a valid stop bit. That is, the stop bit following the last data bit is detected as “0b”. The bit will be cleared by H/W if new data are received (only UART mode). 0 No Frame Error. 1 Frame error detected. This bit is cleared to ‘0’ when write ‘1’.
0	PEn	Parity Error bit. This bit is set when the received data has a parity error on parity enable. The bit will be cleared by H/W if new data are received (only UART mode). 0 No Parity Error. 1 Parity error detected. This bit is cleared to ‘0’ when write ‘1’.

15.3.5 USARTn_BDR: USARTn baud rate generation register

USARTn_BDR register is 32-bit size and accessible in 32/16/8-bit. (n = 10)

USART10_BDR=0x4000_3810

31 30 29 28 27 26 25 24	23 22 21 20 19 18 17 16	15 14 13 12 11 10 9 8	7 6 5 4 3 2 1 0
Reserved			BDATA
0x00000			0xFFF
-			RW

11 0	BDATA	The value in this register is used to generate internal baud rate in UART mode or to generate SCK clock in SPI mode. The range is 0x000 to 0xFFF in asynchronous UART and SPI mode but the range is 0x002 to 0xFFF in synchronous mode.

15.3.6 USARTn_RDR: USARTn receive data register

USARTn_RDR register is 32-bit size and accessible in 32/16/8-bit. (n = 10)

USART10_RDR=0x4000_3814

31 30 29 28 27 26 25 24	23 22 21 20 19 18 17 16	15 14 13 12 11 10 9 8	7 6 5 4 3 2 1 0
Reserved			RDATA
0x000000			0 0 0 0 0 0 0 0 0
-			RO

8 0	RDATA	Receive Data bits. A receive shift register is moved to this register after stop bit.

NOTE: When asynchronous or synchronous mode, the RDATA[8] bit is the received 9th bit.

15.3.7 USARTn_TDR: USARTn transmit data register

USARTn_TDR register is 32-bit size and accessible in 32/16/8-bit. (n = 10)

USART10_TDR=0x4000_3818

31 30 29 28 27 26 25 24	23 22 21 20 19 18 17 16	15 14 13 12 11 10 9 8	7 6 5 4 3 2 1 0
Reserved			TDATA
0x000000			0 0 0 0 0 0 0 0 0
–			RW

8 0	TDATA	Transmit Data bits. This register is moved to the transmit shift register after a previous character is completely shifted out. In SPI master mode, the SCK clock is generated when data are moved to the shift register. Do not write to this transmit data register while transmitting in SPI mode.

NOTES:

1. When asynchronous or synchronous mode, the TDATA[8] bit is the 9th bit to be transmitted.
2. The data to be transmitted should be written after all control registers are set.

15.3.8 USARTn_RTODR: USARTn receive time out data register

USARTn_RTODR register is 32-bit size and accessible in 32/16/8-bit. (n = 10)

USART10_RTODR=0x4000_381C

31	30	29	28	27	26	25	24	23	22	21	20	19	18	17	16	15	14	13	12	11	10	9	8	7	6	5	4	3	2	1	0
Reserved																								RTOD							
0x000000																								0xFF							
-																								RW							

7 0	RTOD	USARTn Receive Time Out Data. Counting number: RTOD[7:0] +1

15.3.9 USARTn_RCDR: USARTn receive character detection data register

USARTn_RCDR register is 32-bit size and accessible in 32/16/8-bit. (n = 10)

USART10_RCDR=0x4000_3820

31	30	29	28	27	26	25	24	23	22	21	20	19	18	17	16	15	14	13	12	11	10	9	8	7	6	5	4	3	2	1	0
Reserved																								RCDD							
0x000000																								0x00							
-																								RW							

7 0	RCDD	USARTn Receive Character Detection Data.

15.4 Functional description

The USART comprises a clock generator, a transmitter, and a receiver. The clock generation logic includes synchronization logic for external clock input, which is used for synchronizing or SPI slave operation. Baud rate generator in the clock generation logic is for asynchronous or master (synchronous or SPI) operation.

The Transmitter consists of a write buffer, a serial shift register, a parity generator, and a control logic.

The receiver is the most complex part of the USART module due to its clock and data recovery units. The recovery unit is used for asynchronous data reception. In addition, the receiver has a parity checker, a shift register, and a control logic. The receiver supports the same frame formats as the transmitter and can detect frame error, data overrun and parity errors. (n = 10)

15.4.1 USART clock generation

Figure 65. Clock Generation Block Diagram (USART, n = 10)

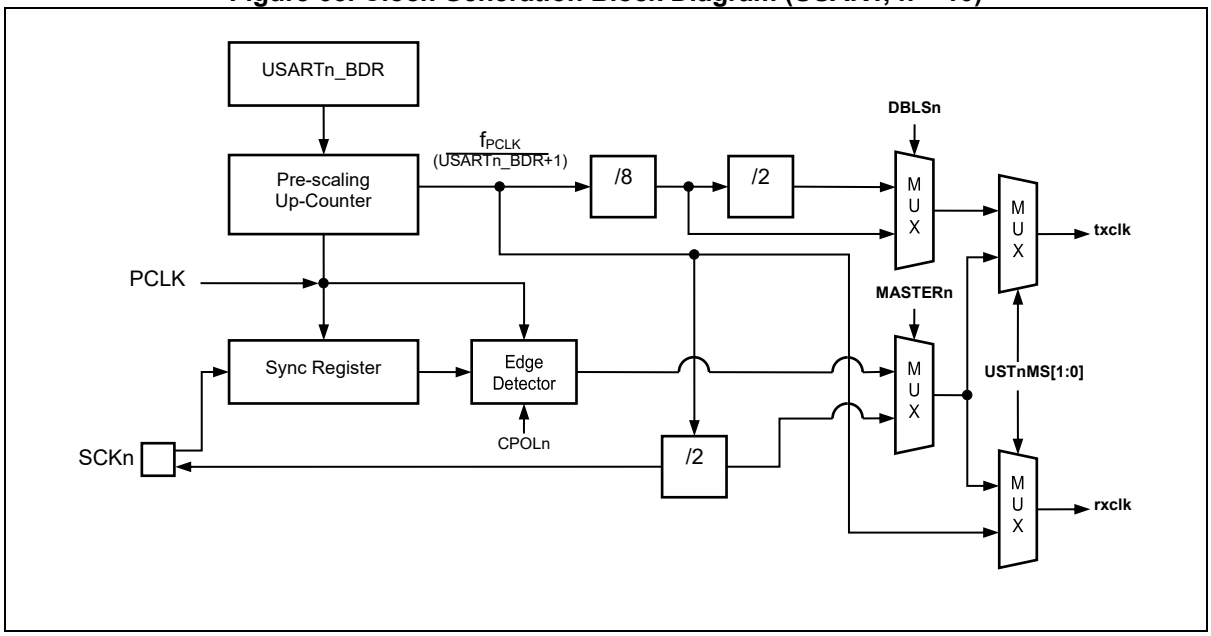

The clock generation logic generates the base clock for the transmitter and receiver. The USART supports four modes of clock operation, which are Normal asynchronous mode, Double speed asynchronous mode, Master synchronous mode and Slave synchronous mode.

The clock generation scheme for master SPI and slave SPI mode is the same as master synchronous and slave synchronous operation mode. The USTnMS[1:0] bits in USARTn_CR1 register selects asynchronous or synchronous operation. Asynchronous double speed mode is controlled by the DBLS bit in the USARTn_CR2 register.

The MASTER bit in USARTn_CR2 register controls whether the clock source is internal (master mode, output pin) or external (slave mode, input pin). The SCKn pin is active only when the USART operates in synchronous or SPI mode.

Table 61 shows the equations for calculating the baud rate (in bps).

Table 61. Equations for Calculating USART Baud Rate Register Settings (n = 10)

Operating mode	Equation for calculating baud rate
Asynchronous Normal Mode (DBLSn=0)	Baud Rate = PCLK/(16(USARTn_BDR+1))
Asynchronous Double Speed Mode (DBLSn=1)	Baud Rate = PCLK/(8(USARTn_BDR+1))
Synchronous or SPI Master Mode	Baud Rate = PCLK/(2(USARTn_BDR+1))

15.4.2 External clock (SCKn)

External clock is used in the Synchronous mode or in the SPI slave mode. External clock input from the SCKn pin is sampled by the synchronization logic to remove meta-stability. The output from the synchronization logic must be passed through an edge detector before it is used by the transmitter and the receiver.

This process introduces two CPU clock period delay. The maximum frequency of the external SCKn pin is limited up to 16MHz.

15.4.3 Synchronous mode operation

External clock is used in the Synchronous mode or in the SPI slave mode. When the Synchronous or the SPI mode is used, the SCKn pin will be used as either clock input (slave) or clock output (master).

Data sampling and transmission are issued on different edges of SCKn clock respectively. For example, if data input on RXDn (MISOn in SPI mode) pin is sampled on the rising edge of SCKn clock, data output on TXDn (MOSIn in SPI mode) pin is altered on the falling edge.

The CPOLn bit in USARTn_CR1 register selects which SCKn clock edge is used for data sampling and which is used for data change. As shown in Figure 66 below, when CPOLn is zero, the data will be changed at rising SCKn edge and sampled at falling SCKn edge.

Figure 66. Synchronous Mode SCKn Timing (USART, n = 10)

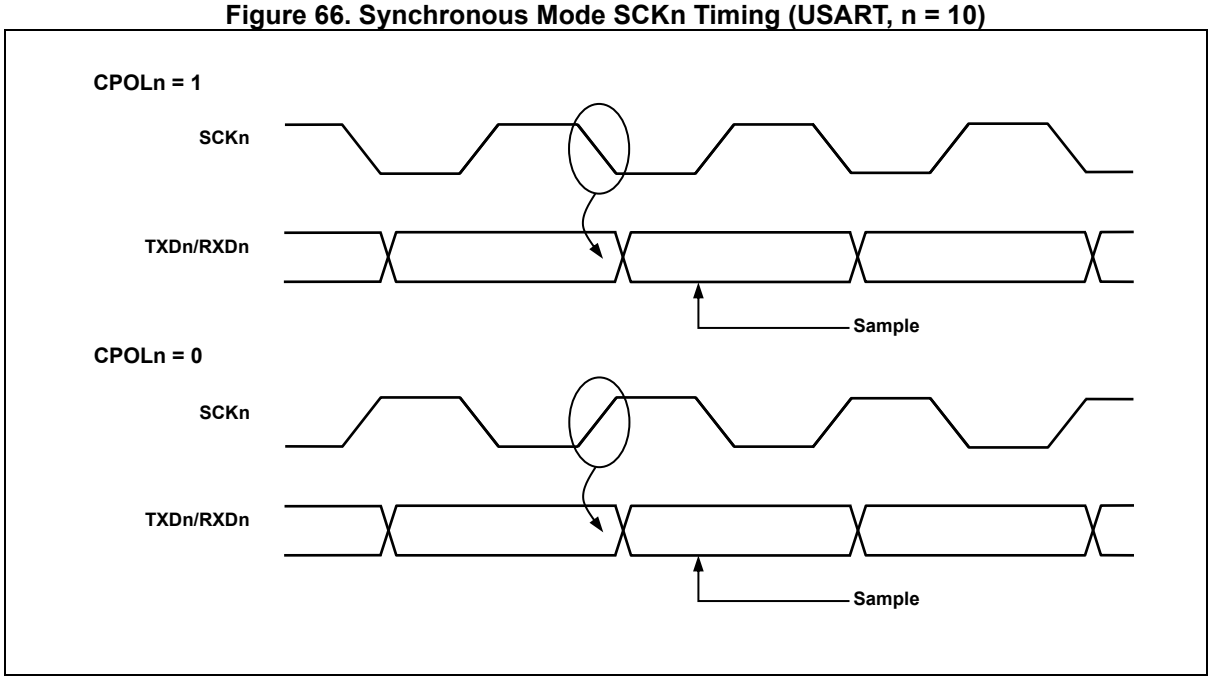

15.4.4 UART data format

A serial frame is defined to be one character of data bits with synchronization bits (start and stop bits), and optionally a parity bit for error detection. The USART supports all 30 combinations of the followings as valid frame formats.

- 1 start bit
- 5, 6, 7, 8 or 9 data bits
- No, even or odd parity bit.
- 1 or 2 stop bits.

A frame starts with the start bit followed by the least significant data bit (LSB). Then the next data bits, up to nine, follow, ending with the most significant bit (MSB). If a parity function is enabled, the parity bit is inserted between the last data bit and the stop bit. A high-to-low transition on data pin is considered as a start bit.

When a complete frame is transmitted, it can be directly followed by a new frame, or the communication line can be set to an idle state. The idle state means high state of data pin. Figure 67 shows a possible combination of the frame formats. Bits inside brackets are optional.

Figure 67. Frame Format (UART)

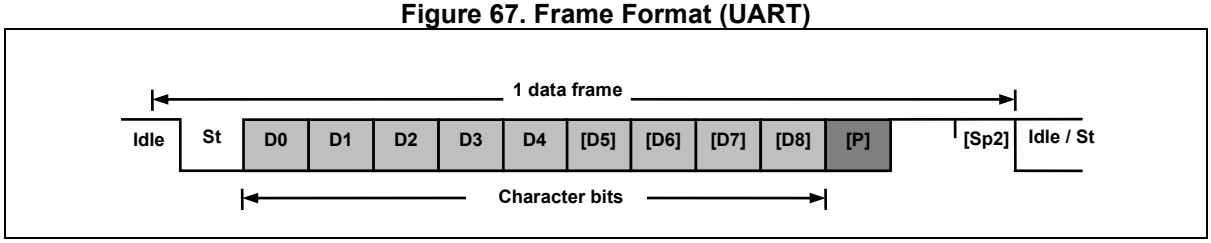

1 data frame consists of the following bits

- Idle: No communication on communication line (TXDn/RXDn)
- St: Start bit (low)
- Dm: Data bits (0 to 8)
- P: Parity bit (even parity, odd parity, no parity)
- Sp: Stop bit (1 bit or 2 bits)

The frame format used by the UART is set by USTnS[2:0], USTnP[1:0] bits in the USARTn_CR1 register and USTnSB bit in the USARTn_CR2 register. The transmitter and the receiver use the same values. (n = 10)

15.4.5 UART parity bit

The parity bit is calculated by doing an exclusive-OR of all data bits. If odd parity is used, the result of the exclusive-OR is inverted. The parity bit is located between the MSB and the first stop bit of a serial frame.

- Peven = Dm-1 ^ … ^ D3 ^ D2 ^ D1 ^ D0 ^ 0
- Podd = Dm-1 ^ … ^ D3 ^ D2 ^ D1 ^ D0 ^ 1
- Peven: Parity bit using even parity
- Podd: Parity bit using odd parity
- Dm: Data bit n of the character

15.4.6 UART transmitter

The UART transmitter is enabled by setting TXEn bit in the USARTn_CR1 register. When the Transmitter is enabled, the TXDn pin should be set to TXDn function for the serial output pin in UART mode by the GPIO registers. Baud-rate, operation mode and frame format must be set up before starting any transmission. In Synchronous operation mode, the SCKn pin is used for transmission clock, so it should be selected to do SCKn function by the GPIO registers. (n = 10)

15.4.6.1 UART sending TX data

A data transmission is initiated by loading data to the transmit data register (USARTn_TDR). The data to be written in transmit data register is moved to the shift register when the shift register is ready to send a new frame.

The shift register is loaded with the new data if it is in idle state or immediately after the last stop bit of the previous frame is transmitted. When the shift register is loaded to the new data, it will transfer one complete frame according to the settings of the control registers.

If 9-bit characters are used in the Asynchronous or the Synchronous operation mode, the 9th bit must be written to TDATA[8] bit in the USARTn_TDR register. (n = 10)

15.4.6.2 UART transmitter flag and interrupt

The UART transmitter has two flags that indicate its state. One is USART data register empty flag (DREn) and the other is transmit completion flag (TXCn). Both flags can be used as interrupt sources.

DREn flag indicates whether the transmit buffer is ready to receive new data. This bit is set when the transmit buffer is empty and cleared when the transmit buffer contains data to be transmitted but has not yet been moved into the shift register.

When the data register empty interrupt enable (DRIEn) bit in USARTnCR1 register is set and the global interrupt is enabled, USARTn_ST status register empty interrupt is generated while DREn flag is set.

Transmit complete (TXCn) flag bit is set when the entire frame in the transmit shift register has been shifted out. The TXCn flag can be cleared by writing ‘1’ to TXCn bit in the USARTn_ST register.

When transmit complete interrupt enable (TXCIEn) bit in the USARTn_CR1 register is set and the global interrupt is enabled, UART transmit complete interrupt is generated while TXCn flag is set. (n = 10)

15.4.6.3 UART parity generator

The parity generator calculates the parity bit for the serial frame data to be sent. When parity bit is enabled (USTnP1=1), the transmitter control logic inserts the parity bit between the MSB and the first stop bit of the frame to be sent. (n = 10)

15.4.6.4 UART disabling transmitter

Disabling the transmitter by clearing the TXEn bit will not become effective until the current transmission is completed. When the transmitter is disabled, the TXDn pin can be used as a normal general purpose I/O (GPIO). (n = 10)

15.4.7 UART receiver

The UART receiver is enabled by setting RXEn bit in the USARTn_CR1 register. When the receiver is enabled, the RXDn pin should be set to RXDn function for the serial input pin in the UART mode by the GPIO registers. Baud-rate, operation mode and frame format must be set before serial reception. In Synchronous or SPI operation mode, the SCKn pin is used as a transfer clock input, so it should be selected to do SCKn function by the GPIO registers. (n = 10)

15.4.7.1 UART receiving RX data

When the UART is in Synchronous mode or in Asynchronous mode, the receiver starts data reception if it detects a valid start bit (LOW) on RXDn pin. Each bit after the start bit is sampled at predefined baud-rate (asynchronous) or at sampling edge of SCKn (synchronous), and shifted into the receive shift register until the first stop bit of a frame is received.

Even if there is a second stop bit in the frame, the second stop bit is ignored by the receiver. That is, receiving the first stop bit means that a complete serial frame is presented in the receiver shift register and contents of the shift register are to be moved into the receive data register (USARTn_RDR). (n = 10)

15.4.7.2 UART receiver flag and interrupt

The UART receiver has a flag that indicates the receiver's state. The receive complete (RXCn) flag indicates whether there are unread data in the receive buffer. This flag is set when there is unread data in the receive buffer and cleared when the receive buffer is empty. If the receiver is disabled (RXEn=0), the receiver buffer is flushed and the RXCn flag is cleared.

When the receive complete interrupt enable (RXCIEn) bit in the USARTn_CR1 register is set and global interrupt is enabled, the UART receiver complete interrupt is generated while RXCn flag is set.

The UART receiver has three error flags, which are frame error (FEn), data overrun (DORn) and parity error (PEn). These error flags can be read from the USARTn_ST register.

The frame error (FEn) flag indicates state of the first stop bit. The FEn flag is '0' when the stop bit was correctly detected as '1', while the FEn flag is '1' when the stop bit was incorrect, i.e. detected as '0'. This flag can be used for detecting out-of-sync conditions between data frames.

The data overrun (DORn) flag indicates data loss due to a full receive buffer condition. DORn occurs when the receive buffer is full, and another new data is presented in the receive shift register to be stored into the receive buffer. After the DORn flag is set, all the incoming data are lost. To avoid data loss or to clear this flag, receive buffer must be read.

The parity error (PEn) flag indicates that the frame in the receive buffer had a parity error during reception. If parity check function is not enabled (USTnP1=0), the PEn bit is always read as ‘0’. (n = 10)

15.4.7.3 UART parity checker

If parity bit is enabled (USTnP1=1), the parity checker calculates the parity of the data bits in incoming frame and compares the result with the parity bit from the received serial frame. (n = 10)

15.4.7.4 UART disabling receiver

Unlike the transmitter, the receiver becomes inactive immediately after it is disabled by clearing RXEn bit. When the receiver is disabled, the receiver flushes the receive buffer, the remaining data in the buffer is all reset, and the RXDn pin can be used as a normal general purpose I/O (GPIO). (n = 10)

15.4.7.5 Asynchronous data reception

To receive asynchronous data frame, the USART includes a clock and data recovery unit. The clock recovery logic is used for synchronizing the internally generated baud-rate clock to the incoming asynchronous serial frame on the RXDn pin. The data recovery logic samples and filters the incoming bits with a low pass filter, and removes the noise of RXDn pin.

Figure 68 illustrates the sampling process of the start bit of an incoming frame. The sampling rate is 16 times the baud-rate in normal mode and 8 times the baud-rate for double speed mode (DBLSn=1). The horizontal arrows show the synchronization variation due to the asynchronous sampling process. Note that larger time variation is seen using the double speed mode. (n = 10)

Figure 68. Asynchronous Start Bit Sampling (n = 10)

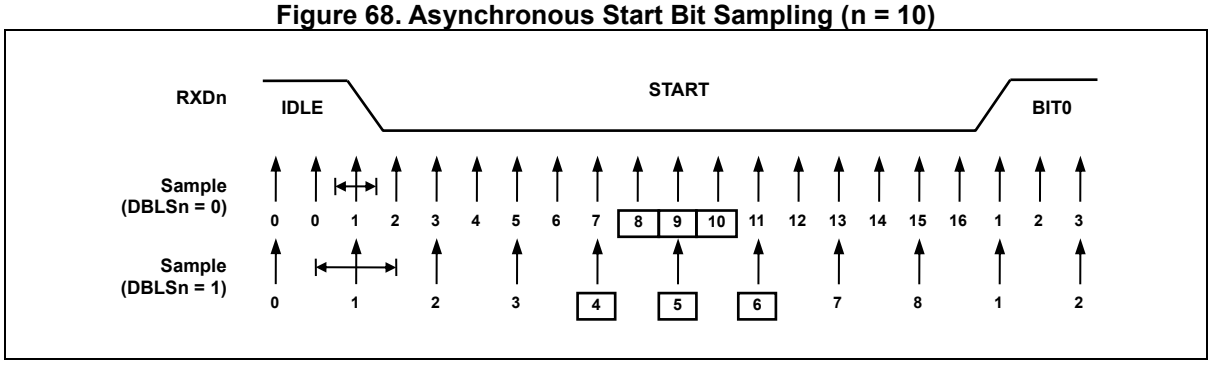

When the receiver is enabled (RXEn=1), the clock recovery logic tries to find a high-to-low transition on the RXDn line, which is the start bit condition. After detecting the high-to-low transition on RXDn line, the clock recovery logic uses samples 8, 9 and 10 for normal mode to detect whether valid start bit is received.

If more than 2 samples have logical low level, it is considered that a valid start bit is detected and the internally generated clock is synchronized to the incoming data frame. Then the data recovery can begin. The synchronization process is repeated for each start bit.

As described above, when the receiver clock is synchronized to the start bit, the data recovery can begin. Data recovery process is almost the same as clock recovery process.

The data recovery logic samples each incoming bit 16 times for normal mode and 8 times for double speed mode, and uses sample 8, 9 and 10 to decide data value. If more than 2 samples have low levels, the received bit is considered as a logic ‘0’ and if more than 2 samples have high levels, the received bit is considered as a logic ‘1’.

The data recovery process is then repeated until a complete frame is received, including the first stop bit. The decided bit value is stored in the receive shift register in order. Note that the Receiver only uses the first stop bit of a frame. Internally, after receiving the first stop bit, the receiver is in idle state and waits to find the start bit. (n = 10)

Figure 69. Asynchronous Sampling of Data and Parity Bit (n = 10)

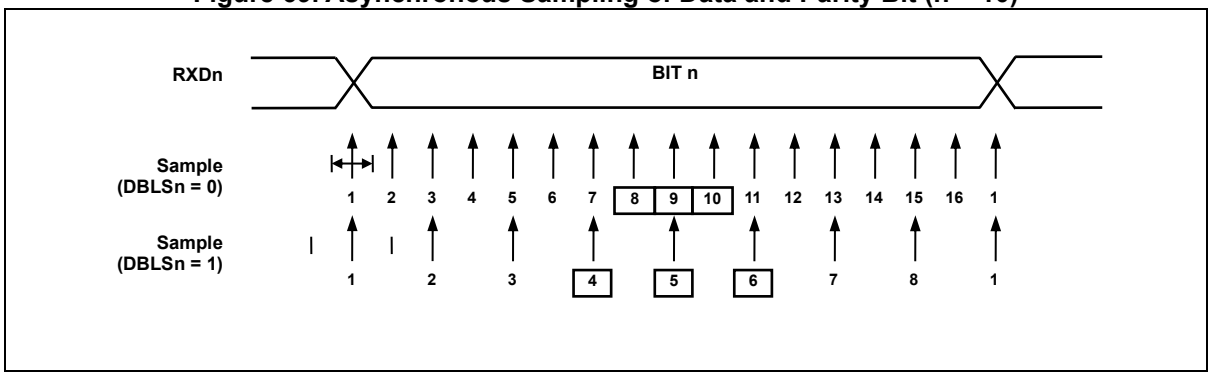

The process for detecting stop bit is the same as clock and data recovery process. That is, if 2 or more samples of 3 center values have high level, correct stop bit is detected, or else a frame error (FEn) flag is set.

After deciding whether the first stop bit is valid or not, the receiver goes to idle state and monitors the RXDn line to check whether a valid high to low transition is detected (start bit detection). (n = 10)

Figure 70. Stop Bit Sampling and Next Start Bit Sampling (n = 10)

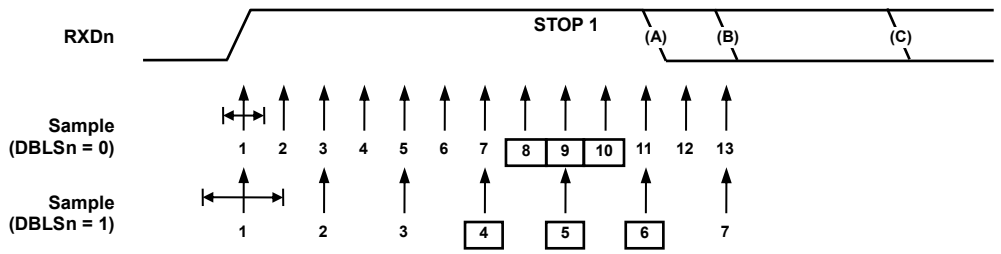

15.4.7.6 Receive time out function

The receive time out function is used for checking a frame finish. This function is to count time with baud rate unit between the last start bit and a new start bit, and between setting the RTOENn bit of USARTn_CR3 register and a new start bit. The USARTn_RTODR register should have duration time value before using the receive time out function. (n = 10)

Figure 71. Receive Time Out Function (n = 10)

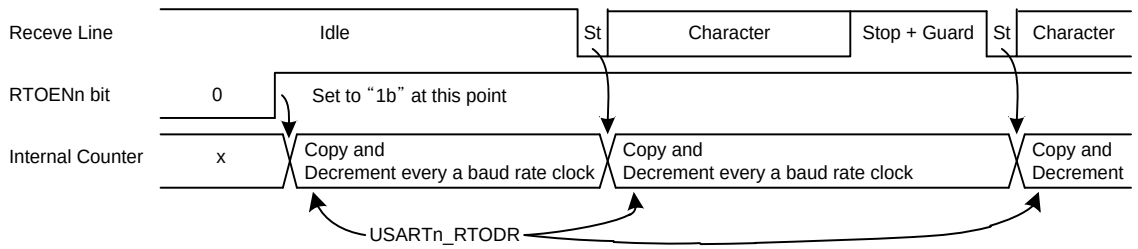

NOTES:

1. The value of USARTn_RTODR register is transferred to an internal counter when the RTOENn bit is set to "1b" or when a start bit is received to.
2. If the RTOENn bit is set to "1b", the internal counter counts down until underflow.
3. The RTOnIFLAG bit of USARTn_CR3 register is set to "1b" on the internal counter underflow and the receive time out function is finished. So, to re-use the receive time out function, the RTOENn bit must be cleared to "0b" and then set to "1b" again.

15.4.7.7 UART auto baud rate detection

The auto baud rate detection is enabled by setting “1b” to the ABDENn bit of the USARTn_CR3 register. The function is useful when using clock source with relatively low accuracy. There are two auto baud rate detection modes, “Start bit to measure” and “0x55 character to measure”. (n = 10)

Figure 72. Auto Baud Rate Detection Timing Diagram (n = 10)

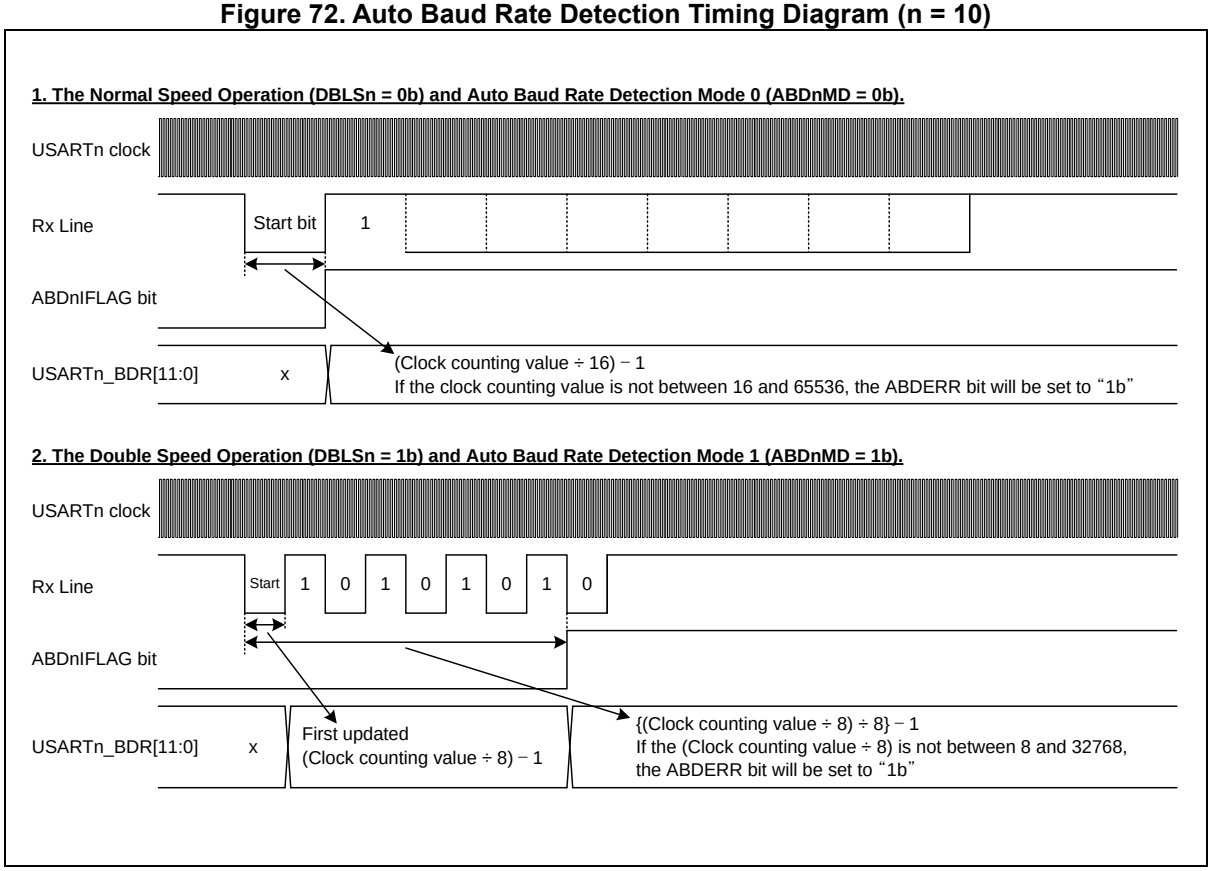

15.4.8 SPI mode

The USART can be set to operate in industrial standard SPI compliant mode. The SPI mode has the following features.

- Full Duplex, Three-wire synchronous data transfer.
- Mater and Slave Operation.
- Supports all four SPI modes of operation (mode 0, 1, 2, and 3).
- Selectable LSB first or MSB first data transfer.
- Double buffered transmit and receive.
- Programmable transmit bit rate.
- Up to 16MHz data transfer for SPI

When the SPI mode is enabled by configuring USTnMS[1:0] as ”11”, the slave select (SSn) pin becomes active LOW input in Slave mode operation if USTnSSEN bit is set to ‘1’. The SSn function is not automatically controlled in master mode operation even if USTnSSEN bit is set to ‘1’.

Note that during SPI mode of operation, the pin RXDn is renamed as MISOn and TXDn is renamed as MOSIn for compatibility to other SPI devices. (n = 10)

15.4.9 SPI clock formats and timing

To accommodate a wide variety of synchronous serial peripherals from different manufacturers, the USART has a clock polarity bit (CPOLn) and a clock phase control bit (CPHAn) to select one of four clock formats for data transfers. CPOLn selectively inserts an inverter in series with the clock. CPHAn chooses between two different clock phase relationships between the clock and data. Note that CPHAn and CPOLn bits in USTnCR0 register have different meanings according to the USTnMS[1:0] bits, which decide the operating mode of USART.

Table 62 shows four combinations of CPOLn and CPHAn for SPI mode 0, 1, 2, and 3. (n = 10)

Table 62. CPOL Functionality (n = 10)

SPIn mode	CPOLn	CPHAn	Leading edge	Trailing edge
0	0	0	Sample (Rising)	Setup (Falling)
1	0	1	Setup (Rising)	Sample (Falling)
2	1	0	Sample (Falling)	Setup (Rising)
3	1	1	Setup (Falling)	Sample (Rising)

Figure 73. USART SPIn Clock Formats when CPHAn=0 (n = 10)

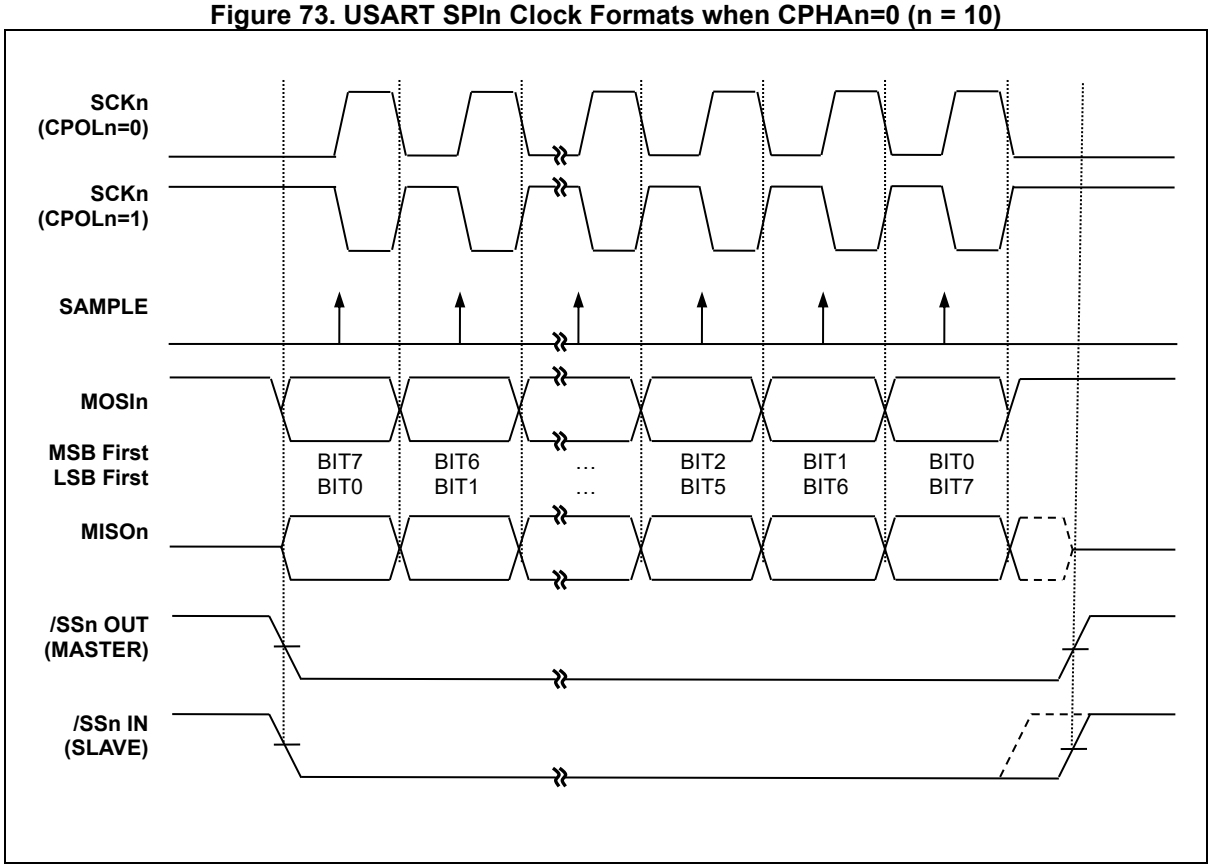

When CPHAn=0, the slave begins to drive its MISOn output with the first data bit value when SSn goes to active low.

The first SCKn edge causes both the master and the slave to sample the data bit value on their MISOn and MOSIn inputs, respectively.

At the second SCKn edge, the USART shifts the second data bit value out to the MOSIn and MISOn outputs of the master and slave, respectively. (n = 10)

Figure 74. USART SPIn Clock Formats when CPHAn=1 (n = 10)

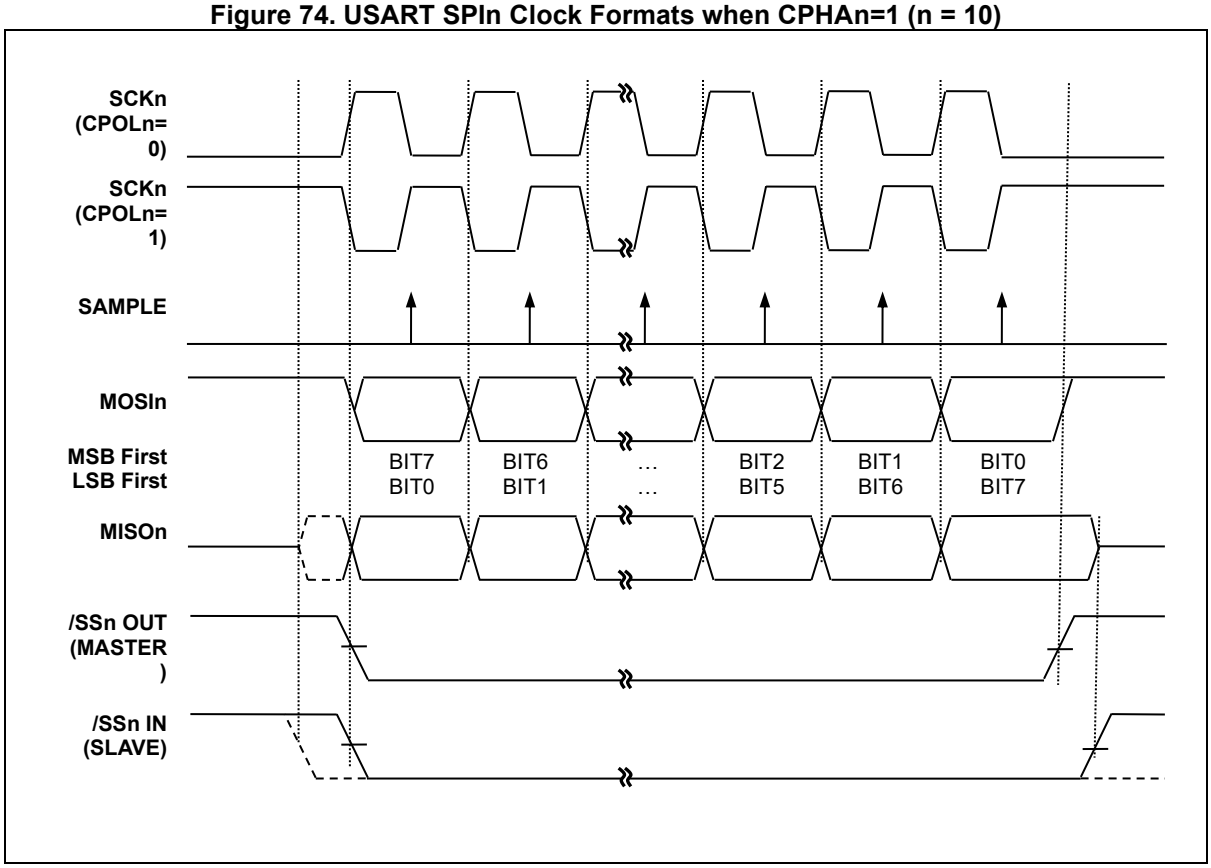

When CPHAn=1, the slave begins to drive its MISOn output when SSn goes active low, but the data is not defined until the first SCKn edge.

The first SCKn edge shifts the first bit of data from the shifter onto the MOSIn output of the master and the MISOn output of the slave.

The next SCKn edge causes both the master and slave to sample the data bit value on their MISOn and MOSIn inputs, respectively.

At the third SCKn edge, the USART shifts the second data bit value out to the MOSIn and MISOn output of the master and slave respectively.

Because the SPIn logic reuses USART resources, SPIn mode of operation is similar to that of synchronous or asynchronous operation.

A SPIn transfer is initiated by checking for the USART Data Register Empty flag (DREn=1) and then writing a byte of data to the USARTn_TDR Register. In master mode of operation, even when transmission is not enabled (TXEn=0), writing data to the USARTn_TDR register is necessary because the clock SCKn is generated from the transmitter block.

15.4.10 Local interconnection network (LIN) mode

The LIN mode is selected by writing “10b” to the USTnMS[1:0] bits of the USARTn_CR1 register. The LIN transmission is fixed as start bit, 8-bits data length, 1 stop bit, and no parity. So, it should be set as follows.

- USTnP[1:0] bits of USARTn_CR1: cleared to “00b” for no parity.
- USTnS[2:0] bits of USARTn_CR1: set to “011b” for 8-bit data length.
- USTnSB and LOOPSn bits USARTn_CR2: cleared to “0b” for 1 stop bit and normal operation.

During LIN mode is enabled, the break field detection circuit is activated and it is independent from the UART receiver. A break field can be detected whenever it occurs during idle state or during a frame.

When the auto baud rate detection is enabled by setting “1b” to the ABDENn bit of USARTn_CR3 register, the Rx break field may not be detected. So, the auto baud rate detection function should be enabled after the Rx break field detection if needed.

Figure 75 shows the timing diagram for LIN break field.

Figure 75. LIN Break Field Detection and Transmit Timing Diagram (n = 10)

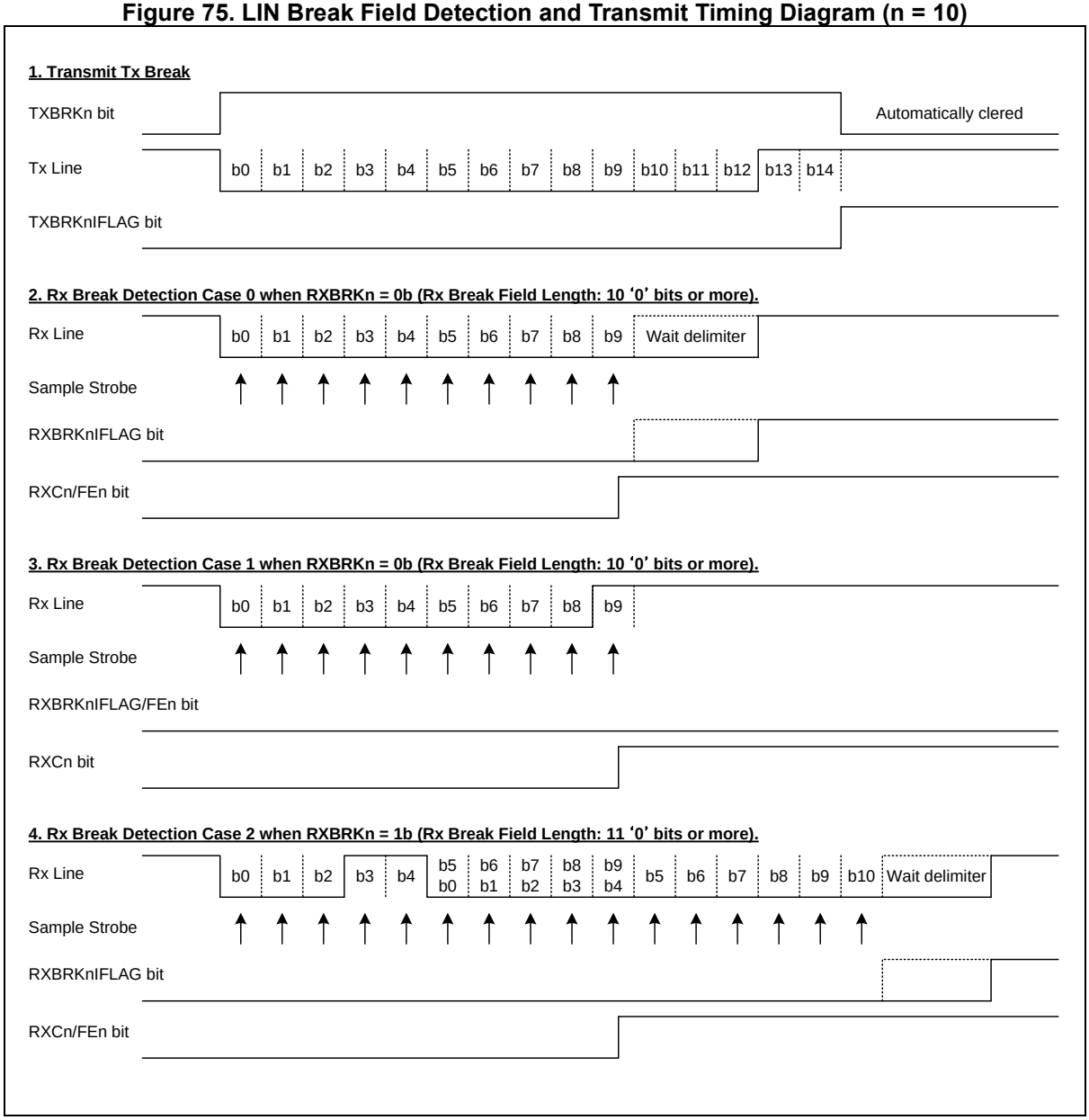

16 UART 0

The A31L22x series has a built-in 1-channel UART module (Universal Asynchronous Receiver/Transmitter).

Users can read the UART operation status including the error status from the status register.

A baud rate generator, which generates proper baud rate, exists for each UART channel. This baud rate generator divides down the PCLK to the frequency ranging from 1 to 65536. Then, the baud rate is generated using a 1:16 clock and an 8-bit precision clock tuning function.

The UART 0 of the A31L22x series features the followings:

- Compatible with 16450 UART
- Configurable standard asynchronous control bit (Start, Stop, and Parity)
- Programmable 16-bit fractional baud generator
- Programmable serial communication
- 5-, 6-, 7- or 8- bit data transfer
- Even, odd, or no-parity bit insertion and detection
- 1-, 1.5- or 2-Stop bit-insertion and detection
- 16-bit baud rate generation with 8-bit fraction control
- Hardware inter-frame delay function
- Stop bit error detection
- Detail status register

16.1 UART 0 block diagram

Figure 76 shows a block diagram of the UART block.

Figure 76. UART 0 Block Diagram

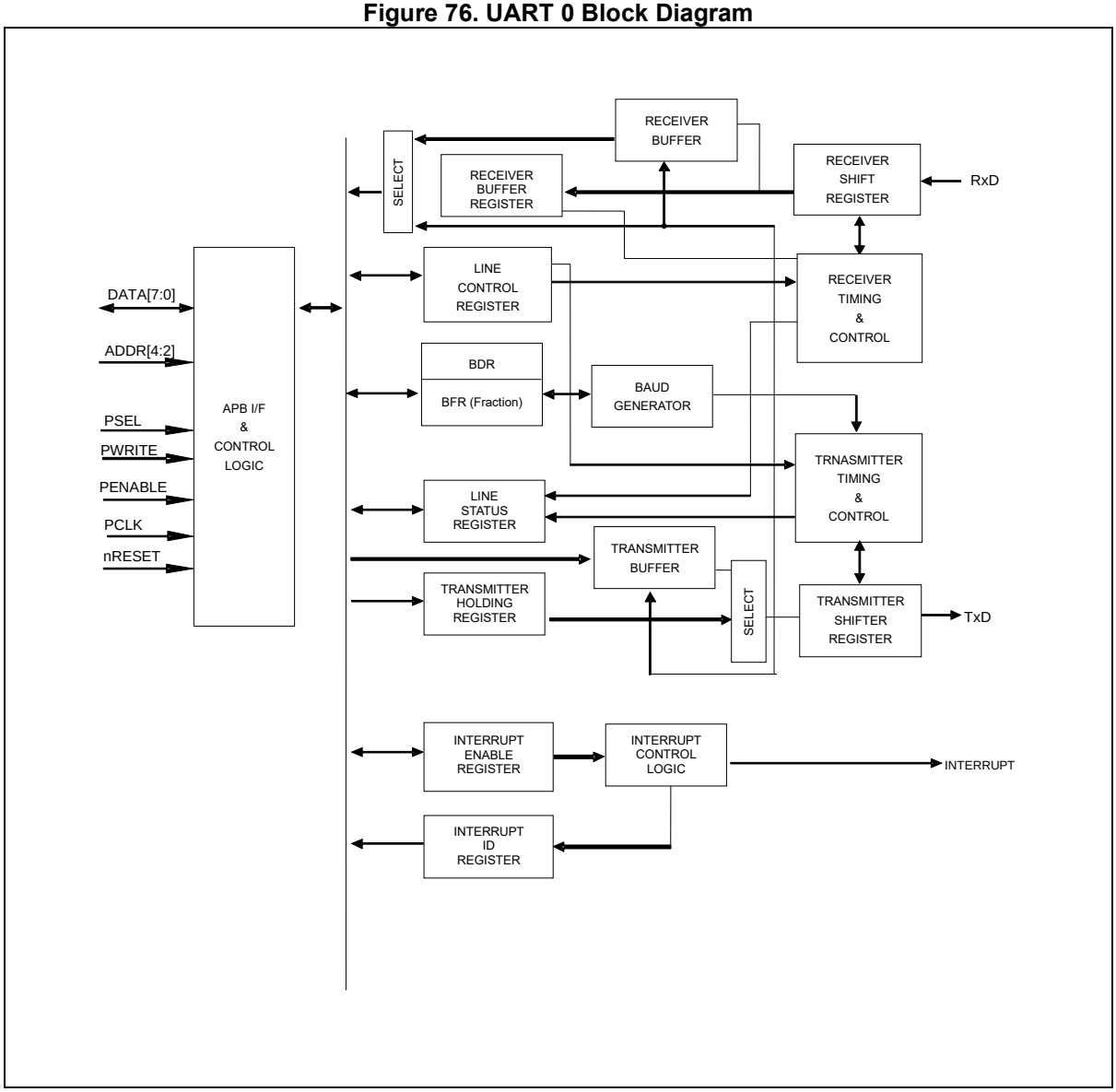

16.2 Pin description for UART 0

Table 63. Pins and External Signals for UART 0 (n = 0)

Pin name	Type	Description
TXDn	O	UART Channel n transmit output
RXDn	I	UART Channel n receive input

16.3 Registers

Base address and register map of the UART are shown in Table 64 and Table 65.

Table 64. Base Address of UART

Name	Base address	Size	Description
UART0	0x4000_4000	256	UART0 Block

Table 65. UART n Register Map (n = 0)

Name	Offset	Type	Description	Reset value
UARTn_RBR	0x00	RO	UARTn Receive Data Buffer Register	0x00000000
UARTn_THR	0x00	WO	UARTn Transmit Data Hold Register	0x00000000
UARTn_IER	0x04	RW	UARTn Interrupt Enable Register	0x00000000
UARTn_IIR	0x08	RO	UARTn Interrupt ID Register	0x00000001
UARTn_LCR	0x0C	RW	UARTn Line Control Register	0x00000000
UARTn_DCR	0x10	RW	UARTn Data Control Register	0x00000000
UARTn_LSR	0x14	RO	UARTn Line Status Register	0x00000060
UARTn_BDR	0x20	RW	UARTn Baud Rate Divisor Latch Register	0x00000000
UARTn_BFR	0x24	RW	UARTn Baud Rate Fractional Counter Value	0x00000000
UARTn_IDTR	0x30	RW	UARTn Inter-frame Delay Time Register	0x000000C0

16.3.1 UARTn_RBR: UARTn receive data buffer register

Received data will be read from UARTn_RBR register. The maximum length of data is 8 bits. The last data received will stay in this register until a new byte is received.

UARTn_RBR register is 32-bit size and accessible in 32/16/8-bit. (n = 0)

UART0_RBR=0x4000_4000

31 30 29 28 27 26 25 24	23 22 21 20 19 18 17 16	15 14 13 12 11 10 9 8	7 6 5 4 3 2 1 0
Reserved			**RBR**
0x000000			**0x00**
-			**RO**

7 0	RBR	UARTn Receive Data Buffer.

16.3.2 UARTn_THR: UARTn transmit data hold register

UARTn_THR register is 32-bit size and accessible in 32/16/8-bit. (n = 0)

UART0_THR=0x4000_4000

31 30 29 28 27 26 25 24	23 22 21 20 19 18 17 16	15 14 13 12 11 10 9 8	7 6 5 4 3 2 1 0
Reserved			THR
0x000000			0x00
-			WO

7 0	THR	UARTn Transmit Data Hold.

16.3.3 UARTn_IER: UARTn interrupt enable register

UARTn_IER register is 32-bit size and accessible in 32/16/8-bit. (n = 0)

UART0_IER=0x4000_4004

31 30 29 28 27 26 25 24	23 22 21 20 19 18 17 16	15 14 13 12 11 10 9 8	7 6 5 4	3	2	1	0
Reserved				TXEIE	RLSIE	THREIE	DRIE
0x0000000				0	0	0	0
-				RW	RW	RW	RW

3	TXEIE	Transmit Register Empty Interrupt Enable.	
		0	Disable transmit register empty interrupt.
		1	Enable transmit register empty interrupt.
2	RLSIE	Receiver Line Status Interrupt Enable.	
		0	Disable receiver line status interrupt.
		1	Enable receiver line status interrupt.
1	THREIE	Transmit Holding Register Empty Interrupt Enable.	
		0	Disable transmit hold register empty interrupt.
		1	Enable transmit hold register empty interrupt.
0	DRIE	Data Receive Interrupt Enable.	
		0	Disable data receive interrupt.
		1	Enable data receive interrupt.

16.3.4 UARTn_IIR: UARTn interrupt ID register

UARTn_IIR register is 32-bit size and accessible in 32/16/8-bit. (n = 0)

UART0_IIR=0x4000_4008

31 30 29 28 27 26 25 24	23 22 21 20 19 18 17 16	15 14 13 12 11 10 9 8	7 6 5	4	3	2 1	0
Reserved				**TXE**	**Reserved**	**IID**	**IPEN**
0x000000				**0**	**0**	**00**	**1**
-				**RO**	**-**	**RO**	**RO**

4	TXE	Transmit Complete Interrupt Source ID.
2	IID	UARTn Interrupt ID.
1		**NOTE**: The UARTn supports 3-priority interrupt generation and the interrupt source ID register shows one interrupt source which has highest priority among pending interrupts. The priority is defined as below. — Receive line status interrupt. — Receive data ready interrupt and Character timeout interrupt. — Transmit hold register empty interrupt.
0	IPEN	Interrupt Pending. 0 Interrupt is pending. 1 No interrupt is pending.

Table 66. Interrupt ID and Control of UARTn_IIR

Priority	TXE	IID		IPEN	Interrupt sources		
	Bit 4	Bit 2	Bit 1	Bit 0	Interrupt	Interrupt condition	Interrupt clear
-	0	0	0	1	None	-	-
1	0	1	1	0	Receiver Line Status	Overrun, Parity, Framing or Break Error	Read LSR register
2	0	1	0	0	Receiver Data Available	Receive data is available.	Read receive register or read IIR register
3	0	0	1	0	Transmitter Holding Register Empty	Transmit buffer empty	Write transmit hold register or read IIR register
4	1	X	X	X	Transmitter Register Empty	Transmit register empty	Write transmit hold register or read IIR register

NOTE: After check the above bits, Read data buffer to avoid losing interrupt source.

16.3.5 UARTn_LCR: UARTn line control register

UARTn_LCR register is 32-bit size and accessible in 32/16/8-bit. (n = 0)

UART0_LCR=0x4000_400C

31 30 29 28 27 26 25 24	23 22 21 20 19 18 17 16	15 14 13 12 11 10 9 8	7	6	5	4	3	2	1 0
Reserved				BREAK	STICKP	PARITY	PEN	STOPBIT	DLEN
0x000000				0	0	0	0	0	00
-				RW	RW	RW	RW	RW	RW

6	BREAK	Transfer Break Control. The TXDn pin will be driven at low state to notice the alert to the receiver.
		0 Normal transfer mode.
		1 Break transmit mode.
5	STICKP	Force Parity. This bit is effective when the PEN bit is set to ‘1’.
		0 Disable parity stuck.
		1 Enable parity stuck. A parity is always the value of the PARITY bit.
4	PARITY	Parity Mode and Parity Stuck Selection.
		0 Odd parity mode.
		1 Even parity mode.
3	PEN	Parity Bit Transfer Enable.
		0 Disable parity transfer.
		1 Enable parity transfer.
2	STOPBIT	Stop Bit Length Selection.
		0 1 stop bit.
		1 1.5 or 2 stop bit. 1.5 stop bit in case of 5-bit data and 2 stop bit in case of 6/7/8-bit data.
1	DLEN	Data Length Selection.
0		00 5-bit data length
		01 6-bit data length
		10 7-bit data length
		11 8-bit data length

Parity bit will be generated according to bit 3,4,5 of UARTn_LCR register.

Table 67 shows the variation of parity bit generation.

Table 67. Interrupt ID and UARTn_LCR’s Control

STICKP	PARITY	PEN	Parity
X	X	0	No Parity
0	0	1	Odd Parity
0	1	1	Even Parity
1	0	1	Force parity as ‘1’
1	1	1	Force parity as ‘0’

16.3.6 UARTn_DCR: UARTn data control register

UARTn_DCR register is 32-bit size and accessible in 32/16/8-bit. (n = 0)

UART0_DCR=0x4000_4010

31 30 29 28 27 26 25 24	23 22 21 20 19 18 17 16	15 14 13 12 11 10 9 8	7 6 5	4	3	2	1 0
Reserved				LBON	RXINV	TXINV	Reserved
0x000000				0	0	0	00
-				RW	RW	RW	-

4	LBON	Local Loopback Test Mode Enable.
		0 Normal mode.
		1 Local loopback mode. TXDn connected to RXDn internally.
3	RXINV	Receive Data Inversion Selection.
		0 Normal receive data input.
		1 Inverted receive data input.
2	TXINV	Transmit Data Inversion Selection.
		0 Normal transmit output.
		1 Inverted transmit output.

Figure 77. Data Inversion Control Diagram

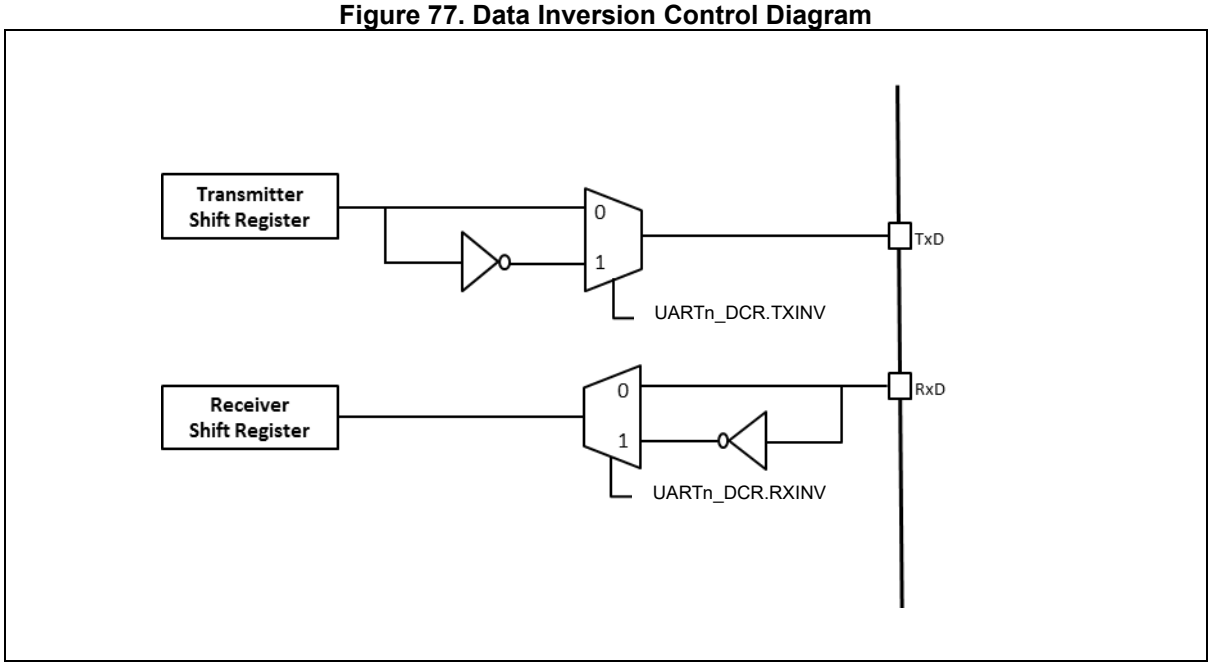

16.3.7 UARTn_LSR: UARTn line status register

UARTn_LSR register is 32-bit size and accessible in 32/16/8-bit. (n = 0)

UART0_LSR=0x4000_4014

31 30 29 28 27 26 25 24	23 22 21 20 19 18 17 16	15 14 13 12 11 10 9 8	7	6	5	4	3	2	1	0
Reserved				**TEMT**	**THRE**	**BI**	**FE**	**PE**	**OE**	**DR**
0x000000				**1**	**1**	**0**	**0**	**0**	**0**	**0**
-				**RO**	**RO**	**RO**	**RO**	**RO**	**RO**	**RO**

6	TEMT	Transmit Empty.
		0 Transmit register has data or is transmitting.
		1 Transmit register is empty.
5	THRE	Transmit Holding Empty.
		0 Transmit hold register is not empty.
		1 Transmit hold register is empty
		NOTE: This bit will be set to '1' when it starts transmission.
4	BI	Break Condition Indication.
		0 Normal status.
		1 Break condition is detected.
3	FE	Frame Error Indicator.
		0 No frame error.
		1 Frame error takes place. The receive character did not have a valid stop.
2	PE	Parity Error Indicator.
		0 No parity error.
		1 Parity error takes place. The receive character does not have correct parity information.
1	OE	Overrun Error Indicator.
		0 No overrun error.
		1 Overrun error takes place. Additional data arrived while RHR is full.
0	DR	Data Receive Indicator.
		0 No data in receive hold register.
		1 Data has been received and is saved in the receive hold register.

This register provides the status of data transfers between transmitter and receiver. A user can check the line status from this register. Bit 1,2,3,4 will raise the line status interrupt when RLSIE bit in UARTn_IER register is set. Other bits can generate interrupts when their interrupt enable bits in UARTn_IER register are set.

16.3.8 UARTn_BDR: UARTn baud rate divisor latch register

UARTn_BDR register is 32-bit size and accessible in 32/16/8-bit. (n = 0)

UART0_BDR=0x4000_4020

31 30 29 28 27 26 25 24	23 22 21 20 19 18 17 16	15 14 13 12 11 10 9 8	7 6 5 4 3 2 1 0
Reserved		BDR	
0x0000		0x0000	
-		RW	

15	BDR	Baud Rate Divider Latch Value
0		Baud rate = PCLK/(16 x (BDR[15:0] + 1)). The range is 0x0000 to 0xFFFF.

To establish communication with the UART channel, baud rate should be set properly. The programmable baud rate generator provides divider number from 0 to 65535. Expected baud rate should be written to the 16-bit divider register (UARTn_BDR). $UART_{clock}$ is PCLK.

Baud rate calculation formula is as follows:

$$\mathrm{BDR} = \frac{UART_{clock}}{16 \times BaudRate} - 1$$

In case of 32MHz $UART_{clock}$ speed, the divider value and error rate is shown in table

Table 68. Example of Baud Rate Calculation (without BFR)

$UART_{clock}$= 32MHz		
Baud rate	**Divider**	**Error (%)**
1200	1665	0.04%
2400	832	0.04%
4800	415	0.16%
9600	207	0.16%
19200	103	0.16%
38400	51	0.16%
57600	33	2.12%
115200	16	2.12%

16.3.9 UARTn_BFR: UARTn baud rate fraction counter register

UARTn_BFR register is 32-bit size and accessible in 32/16/8-bit. (n = 0)

UART0_BFR=0x4000_4024

31 30 29 28 27 26 25 24	23 22 21 20 19 18 17 16	15 14 13 12 11 10 9 8	7 6 5 4 3 2 1 0
Reserved			BFR
0x000000			0x00
-			RW

7 0	BFR	Fraction Counter value.	
		0	Disable fraction counter.
		N	Fraction compensation mode under operation. Fraction counter is incremented by FCNT. FCNT = Float * 256
		NOTE: 8-bit fractional counter will count up by FCNT value every (baud rate)/16 period and whenever fractional counter overflow is happen, the divisor value will increment by 1. So this period will be compensated. Then next period, the divisor value will return to original set value.	

Table 69. Example of Baud Rate Calculation

$UART_{clock}$ = 32MHz			
Baud rate	**Divider**	**FCNT**	**Error (%)**
1200	1665	170	0.00%
2400	832	85	0.00%
4800	415	170	0.00%
9600	207	85	0.00%
19200	103	42	0.00%
38400	51	21	0.00%
57600	33	184	0.01%
115200	16	92	0.01%

FCNT value can be calculated using the equation below:

$$\mathrm{FCNT} = \mathrm{Float} * 256$$

For example, when the target baud rate is 4800 bps and $UART_{clock}$ is 32MHz, the BDR value is 415.6666. The integer 415 is the BDR value and floating number 0.6666 leads to an FNCT value as follows:

FCNT = 0.6666 * 256 = 170.6496, and thus the FCNT value is 170.

8-bit fractional counter will count up by FCNT value every (baud rate)/16 periods and whenever fractional counter overflow takes place, the divisor value will increment by 1 and compensate this period. Then, the divisor value will return to its original value.

16.3.10 UARTn_IDTR: UARTn inter-frame delay time register

UARTn_IDTR register is 32-bit size and accessible in 32/16/8-bit. (n = 0)

UART0_IDTR=0x4000_4030

31 30 29 28 27 26 25 24	23 22 21 20 19 18 17 16	15 14 13 12 11 10 9 8	7	6	5 4 3	2 1 0
Reserved			**SMS**	**DMS**	**Reserved**	**WAITVAL**
0x000000			**1**	**1**	**000**	**000**
-			**RW**	**RW**	**-**	**RW**

7	SMS	Start Bit Multi Sampling Enable.	
		0	Multi sampling is disabled for start bit, Single sampling will be done at 8/16 baud rate for the start bit.
		1	Multi sampling is enabled for start bit. Sampling is done 3 times at 7/16, 8/16, and 9/16 baud rate. Dominant value among 3 samples will be selected for the start bit.
6	DMS	Data Bit Multi sampling enable.	
		0	Multi sampling is disabled for data bit, Single sampling will be done at 8/16 baud rate for the data bit.
		1	Multi sampling is enabled for data bit. Sampling is done 3 times at 7/16, 8/16, and 9/16 baud rate. Dominant value among 3 samples will be selected for the data bit.
2	WAITVAL	Wait Time Value. Dummy delay can be inserted between 2 Continuous Transmits.	
0		Wait Time = WAITVAL[2:0]/(Baud Rate)	

16.4 Functional description

The UART module is compatible with 16450 UART. Additionally, fractional baud rate compensation logic is provided. It does not have an internal FIFO block.

16.4.1 Receiver sampling timing

The UART of the A31L22x series operates at the following timing as shown in Figure 78.

If falling edge is detected on the receive line, the UART considers it as a start bit. From then on, the UART oversamples 1-bit 16 times and detects the bit value at the 7th sample.

Figure 78. Sampling Timing of UART Receiver

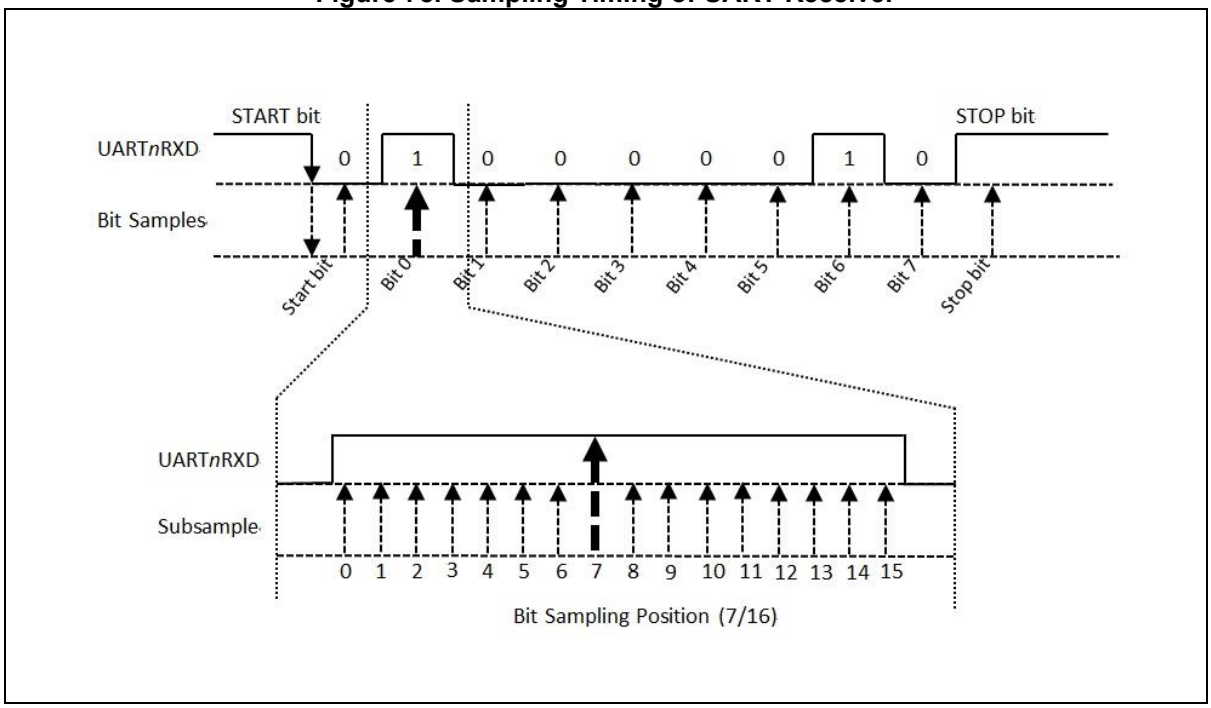

It is recommended to enable debounce settings in the PCU block to enhance the immunity to external glitch noise.

16.4.2 Transmitter

The transmitter has a data transmission function. The start bit, data bits, optional parity bit, and stop bit shift in series, the least significant bit shifting first.

The number of data bit is selected in DLEN[1:0] in the UARTn_LCR register. The parity bit is set according to the PARITY and PEN bits in the UARTn_LCR register. If the parity type is even, the parity bit depends on one-bit sum of all data bits. For odd parity, the parity bit is an inverted sum of all data bits. The number of stop bits is selected in the STOPBIT in the UARTn_LCR register.

The example of transmission data format is introduced in Figure 79.

Figure 79. Transmission Data Format Example

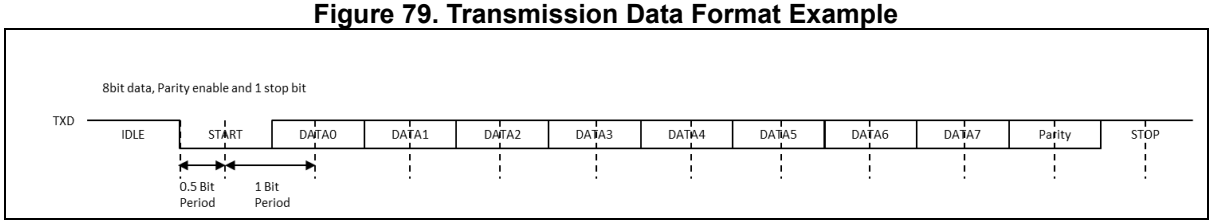

16.4.3 Inter-frame delay transmission

The inter-frame delay function allows the transmitter to insert an idle state on the TXD line between 2 characters. The width of the idle state is defined in WAITVAL field of the UARTn_IDTR register. When this field is set as 0, no time-delay is generated. Otherwise, the transmitter holds a high level on TXD after each transmitted character during the number of bit periods defined in WAITVAL field.

Figure 80. Inter-frame Delay Timing Diagram

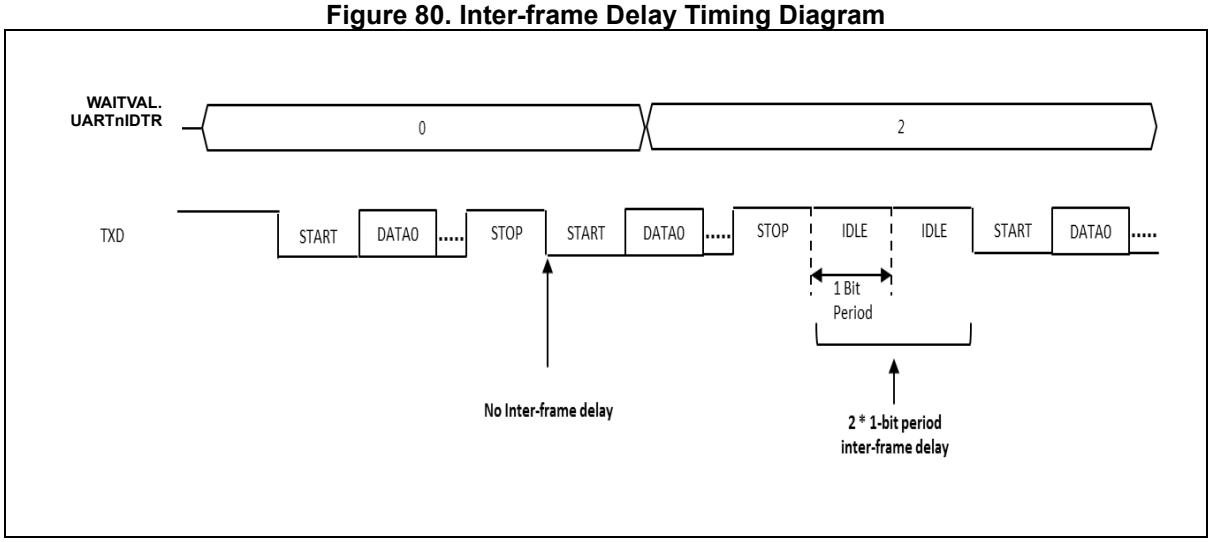

16.4.4 Transmit interrupt

The transmission operation makes some kinds of interrupt flags. When transmitter hold register is empty, the THRE interrupt flag will be raised. When transmitter shifter register is empty, the TXE interrupt flag will be raised. User can select an interrupt timing that works the best for the application.

Figure 81. Transmit Interrupt Timing Diagram

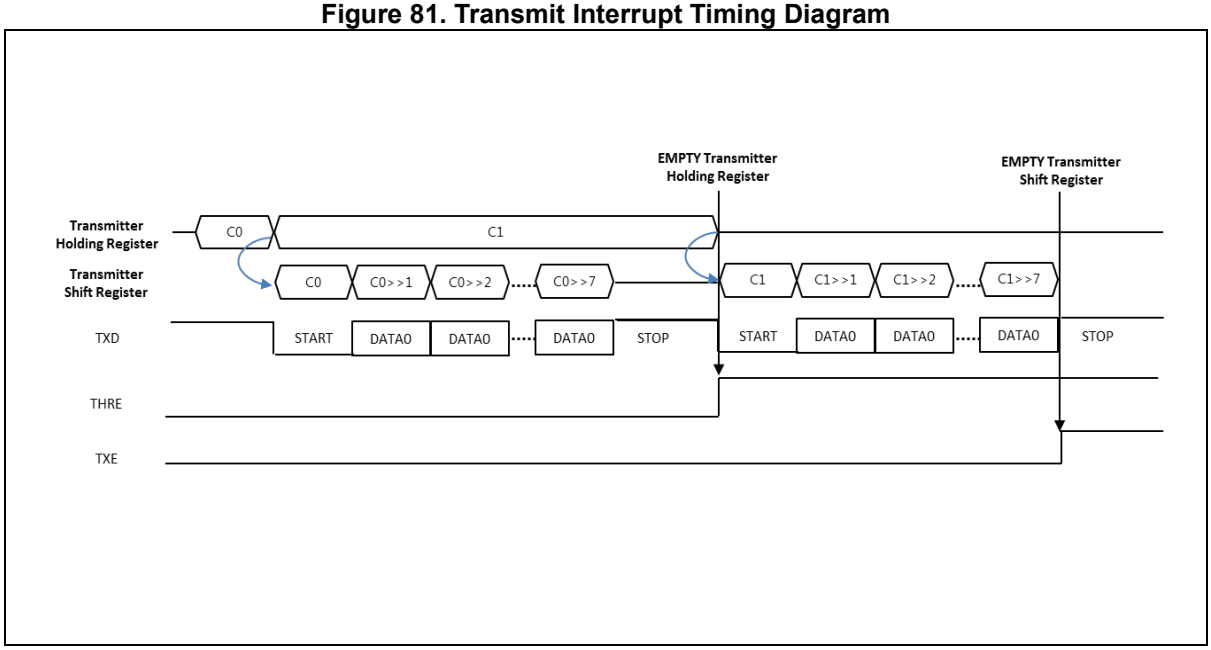

17 LPUART 0

The A31L22x series has a built-in 1-channel low power UART module (Universal Asynchronous Receiver/Transmitter).

This Low Power UART (LPUART) supports asynchronous serial communication up to 9600bps in DEEP SLEEP mode with 32.768kHz sub-oscillator. It also supports 1-wire half-duplex communication.

The LPUART 0 of the A31L22x series features the followings:

- Full-Duplex and Half-Duplex Operations
- Baud Rate Generator
- Serial Frames with 5,6,7, or 8 Data bits and 1 or 2 Stop bits supported
- Odd or Even Parity Generation, and Parity Check Supported by Hardware
- Receive Character Detection and Receive Time Out Function supported
- Baud Rate Compensation Function
- Up to 9600pbs with 32.768kHz sub-oscillator supported
- Data OverRun Detection
- Framing Error Detection
- Double Speed Asynchronous Communication Mode

17.1 LPUART block diagram

Figure 82 shows a block diagram of the LPUART block.

Figure 82. LPUART Block Diagram (n = 0)

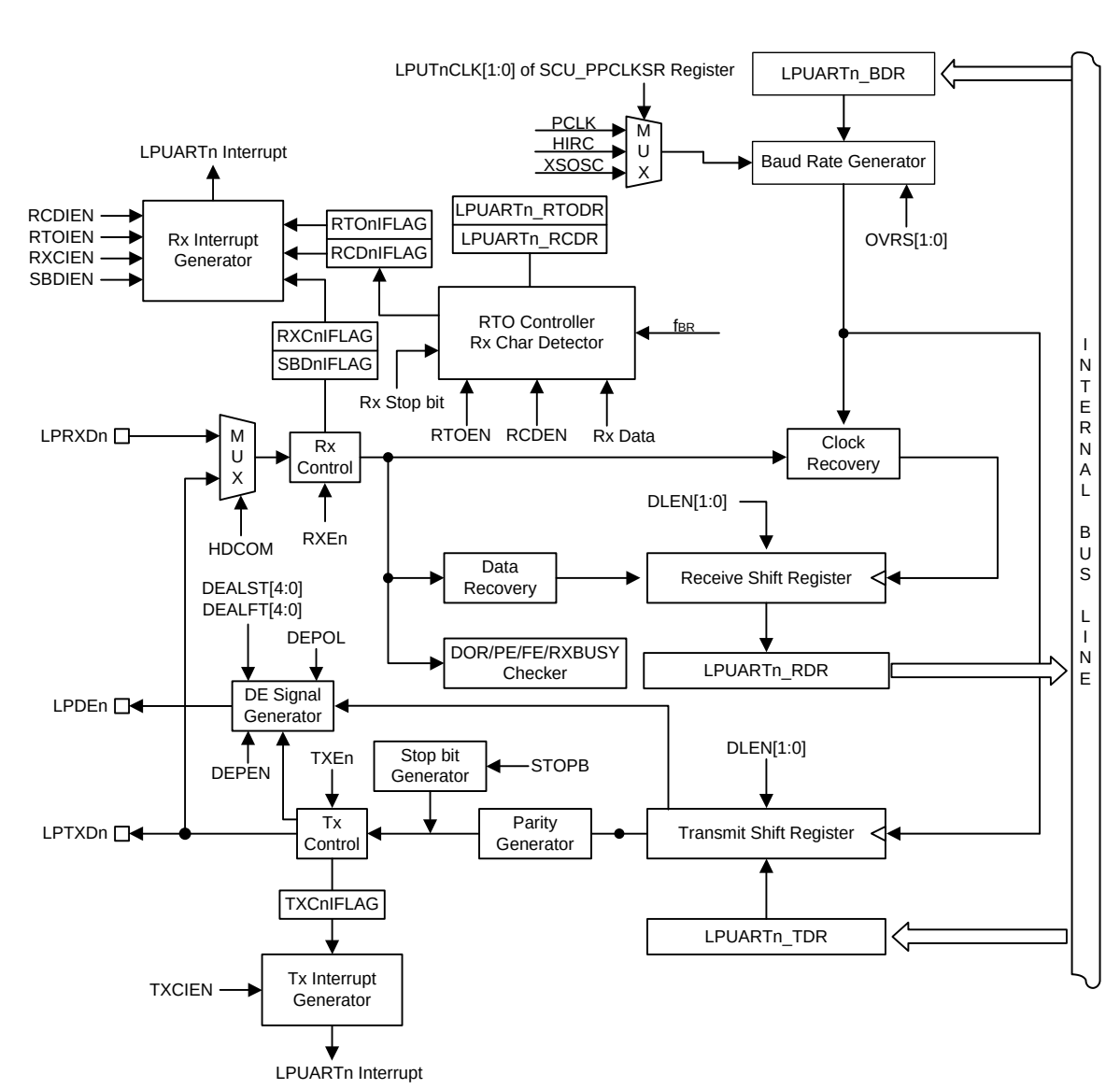

NOTES:

1. If XSOSC (32.768kHz) is used for a clock of the LPUARTn, the maximum baud rate may be up to 9600bps.
2. A clock of PCLK should be faster than or equal to a clock of the LPUARTn.
3. Data to be transmitted should be written to the LPUARTn_TDR register after checking if the TXCIFLAG bit is set to “1b”.

17.2 Pin description for LPUART

Table 70. Pins and External Signals for LPUART (n = 0)

Pin name	Type	Description
LPTXDn	O	Low Power UART n transmit output
LPRXDn	I	Low Power UART n receive input
LPDEn	O	Low Power UART n DE signal output

17.3 Registers

Base address and register map of the LPUART are shown in Table 71 and Table 72.

Table 71. Base Address of LPUART

Name	Base address
LPUART0	0x4000_5C00

Table 72. LPUART Register Map (n = 0)

Name	Offset	Type	Description	Reset Value
LPUARTn_CR1	0x00	RW	LPUARTn Control Register 1	0x00000000
LPUARTn_CR2	0x04	RW	LPUARTn Control Register 2	0x00000000
LPUARTn_IER	0x10	RW	LPUARTn Interrupt Enable Register	0x00000000
LPUARTn_IFSR	0x14	RW	LPUARTn Interrupt Flag and Status Register	0x00000004
LPUARTn_RDR	0x18	RO	LPUARTn Receive Data Register	0x00000000
LPUARTn_TDR	0x1C	RW	LPUARTn Transmit Data Register	0x00000000
LPUARTn_BDR	0x20	RW	LPUARTn Baud Rate Data Register	0x0000FFFF
LPUARTn_BCMP	0x24	RW	LPUARTn Baud Rate Compensation Register	0x00000000
LPUARTn_RTODR	0x28	RW	LPUARTn Receive Time Out Data Register	0x0000FFFF
LPUARTn_RCDR	0x2C	RW	LPUARTn Receive Character Detection Data Register	0x00000000
LPUARTn_DLYDR	0x30	RW	LPUARTn Tx Delay Time Data Register	0x00000000

17.3.1 LPUARTn_CR1: LPUARTn control register 1

Low power UARTn module should be configured properly before running.

LPUARTn_CR1 register is 32-bit size and accessible in 32/16/8-bit. (n = 0)

LPUART0_CR1=0x4000_5C00

31 30 29 28 27 26 25 24	23 22 21 20 19 18 17 16	15	14	13	12	11	10	9	8	7	6	5	4	3	2	1	0
Reserved		Reserved	PEN	STKPEN	PSEL	Reserved	DLEN		Reserved	STOPB	OVRS		HDCOM	TXE	RXE	WAKEN	LPUEN
0x0000		0	0	0	0	0	0	0	0	0	0	0	0	0	0	0	0
–		-	RW	RW	RW	-	RW	RW	-	RW	RW	RW	RW	RW	RW	RW	RW

14	PEN	Parity Enable.
		0 Disable parity bit generation and detection.
		1 Enable parity bit generation and detection.
13	STKPEN	Stick Parity Enable.
		0 Disable stick parity.
		1 Enable stick parity.
		NOTE: On PEN = 1 and STKPEN = 1, The parity bit is 0 if PSEL = 0 and 1 if PSEL = 1.
12	PSEL	Parity Selection.
		0 Odd parity (Odd number of logic ‘1’).
		1 Even parity (Even number of logic ‘1’).
10 9	DLEN	Data Length Selection.
		00 5 bit (Start, D0, D1, D2, D3, D4, Parity or not, Stop1, Stop2 or not).
		01 6 bit (Start, D0, D1, D2, D3, D4, D5, Parity or not, Stop1, Stop2 or not)
		10 7 bit (Start, D0, D1, D2, D3, D4, D5, D6 Parity or not, Stop1, Stop2 or not)
		11 8 bit (Start, D0, D1, D2, D3, D4, D5, D6, D7, Parity or not, Stop1, Stop2 or not).
7	STOPB	Stop bit.
		0 1 Stop bit.
		1 2 Stop bit.
6 5	OVRS	Oversampling Selection.
		00 16 oversampling.
		01 8 oversampling.
		10 No oversampling (Only 1 sampling).
		11 reserved (No oversampling).
4	HDCOM	1-wire Half-Duplex Communication.
		0 Normal operation.
		1 1-wire half-duplex communication (The TXD and RXD lines are internally connected, the RXD pin is not used, and the TXD pin is always an input when no transmitted. So, the TXD pin must be configured to open-drain with an external pull-up resistor)
3	TXE	Enable the Transmitter unit.
		0 Transmitter is disabled.
		1 Transmitter is enabled.
2	RXE	Enable the Receiver unit.
		0 Receiver is disabled.
		1 Receiver is enabled.
1	WAKEN	Wake-up Function bit in DEEP SLEEP Mode. The LPUARTn clock to wake-up from DEEP SLEEP mode must be selected as XSOSC by the SCU_PPCLKSR register. This bit should be set just before entering DEEP SLEEP mode and cleared on exit.
		0 Disable wake-up function in DEEP SLEEP mode.
		1 Enable wake-up function in DEEP SLEEP mode.
		If XSOSC is for clock of LPUARTn, the XSOSC shouldn’t be off in DEEP SLEEP mode.
0	LPUEN	Low Power UARTn Enable bit. This bit can be cleared to “0b” during the corresponding TXE and RXE bits are all “0b”.
		0 Disable LPUARTn block.
		1 Enable LPUARTn block.

NOTE: If this bit is cleared, the LPUARTn current operations are discarded, the configuration is kept, and all the status flags are set to reset values.

17.3.2 LPUARTn_CR2: LPUARTn control register 2

Low power UARTn module should be configured properly before running.

LPUARTn_CR2 register is 32-bit size and accessible in 32/16/8-bit. (n = 0)

LPUART0_CR2=0x4000_5C04

31	30	29	28	27	26	25	24	23	22	21	20	19	18	17	16	15	14	13	12	11	10	9	8	7	6	5	4	3	2	1	0
Reserved								Reserved			DEALST					Reserved			DEALFT					DEPOL	DEPEN	Reserved	RCDEN	RTOEN	Reserved		
0x00								0	0	0	0	0	0	0	0	0	0	0	0	0	0	0	0	0	0	0	0	0	0	0	0
-								-	-	-	RW	RW	RW	RW	RW	-	-	-	RW	RW	RW	RW	RW	RW	RW	-	RW	RW	-	-	-

20 16	DEALST	DE Pin Active Level Start Time. The range is 0x00 to 0x1F. These bits define the time in low power UARTn clock from the active level of DE signal to the beginning of the start bit.
12 8	DEALFT	DE Pin Active Level Finish Time. The range is 0x00 to 0x1F. These bits define the time in low power UARTn clock from the end of the stop bit to the de-active level of DE signal.
7	DEPOL	DE Pin Polarity Selection. 0 Active high level. The DE pin is a high level during transmit a frame, else low level. 1 Active low level. The DE pin is a low during transmit a frame, else high level.

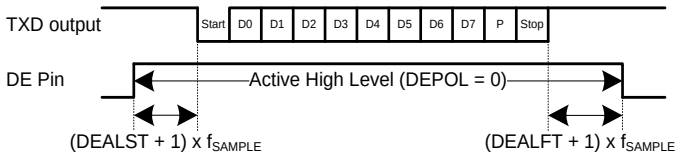

Where $f_{SAMPLE} = f_{LPUART}/(LPUARTn_BDR[15:0] + 1)$

NOTE: A TXCIFLAG bit will be set to “1b” at stop bit and the transmit of next character may start after the end of active level.

6	DEPEN	DE Pin Function Enable. 0 Disable DE pin function. 1 Enable DE pin function.
4	RCDEN	Receive Character Detection Function Enable. This function is to compare the value of LPUARTn_RCDR register with the value just received. 0 Disable receive detection function. 1 Enable receive detection function.
3	RTOEN	Receive Time Out Function Enable. This function is to count time with baud rate units from the leading edge of a start bit to a new start bit. The receive time out controller counts down from the value of LPUARTn_RTODR register every start bit and set this bit. The RTOIFLAG bit is set to “1b” at the counter underflow. The counter clock is a baud-rate bit unit. 0 Disable receive time out function. 1 Enable receive time out function.

17.3.3 LPUARTn_IER: LPUARTn interrupt enable register

LPUARTn_IER register is 32-bit size and accessible in 32/16/8-bit. (n = 0)

LPUART0_IER=0x4000_5C10

31 30 29 28 27 26 25 24	23 22 21 20 19 18 17 16	15 14 13 12 11 10 9 8	7	6	5	4	3	2	1	0
Reserved			RCDIEN	RTOIEN	Reserved	SBDIEN	Reserved	TXCIEN	Reserved	RXCIEN
0x000000			0	0	0	0	0	0	0	0
–			RW	RW	-	RW	-	RW	-	RW

7	RCDIEN	Receive Character Detection Interrupt Enable. On DEEP SLEEP mode, the receive character detection can wake-up system.
		0 Disable receive character detection interrupt.
		1 Enable receive character detection interrupt.
6	RTOIEN	Receive Time Out Interrupt Enable.
		0 Disable receive time out interrupt.
		1 Enable receive time out interrupt.
4	SBDIEN	Start Bit Detection Interrupt Enable bit in DEEP SLEEP mode. On DEEP SLEEP mode, the detection of start bit can wake-up system.
		0 Disable start bit detection interrupt.
		1 Enable start bit detection interrupt.
2	TXCIEN	Transmit Complete Interrupt Enable.
		0 Disable transmit complete interrupt.
		1 Enable transmit complete interrupt.
0	RXCIEN	Receive Data Register Not Empty Interrupt Enable bit. On DEEP SLEEP mode, it can wake-up system if there is a received character.
		0 Disable receive data not empty interrupt.
		1 Enable receive data not empty interrupt.

17.3.4 LPUARTn_IFSR: LPUARTn interrupt flag and status register

LPUARTn_IFSR register is 32-bit size and accessible in 32/16/8-bit. (n = 0)

LPUART0_IFSR=0x4000_5C14

31 30 29 28 27 26 25 24	23 22 21 20 19 18 17 16	15	14	13	12	11 10 9 8	7	6	5	4	3	2	1	0
Reserved		DOR	FE	PE	RXBUSY	Reserved	RCDnIFLAG	RTOnIFLAG	Reserved	SBDnIFLAG	Reserved	TXCnIFLAG	Reserved	RXCnIFLAG
0x0000		0	0	0	0	0 0 0 0	0	0	0	0	0	1	0	0
–		RW	RW	RW	RO	- - - -	RW	RW	-	RW	-	RW	-	RW

15	DOR	Data Overrun. This bit is set when the receive shift register is transferred to the LPUARTn_RDR register while the RXCnIFLAG=1. The data of the shift register are ignored. This bit must be cleared by S/W to receive new data. 0 No data overrun. 1 Data overrun detected. This bit is cleared to ‘0’ when write ‘1’.
14	FE	Frame Error bit. This bit is set when the received data have not a valid stop bit (That is, the stop bit following the last data bit is detected as “0b”). The bit will be cleared by H/W if new data are received. 0 No frame error. 1 Frame error detected, This bit is cleared to ‘0’ when write ‘1’.
13	PE	Parity Error bit. This bit is set when the received data has a parity error on parity enable. The bit will be cleared by H/W if new data are received. 0 No parity error. 1 Parity error detected, This bit is cleared to ‘0’ when write ‘1’.
12	RXBUSY	RXD Line Busy bit. This bit is set at a start bit and reset at the end of the reception. 0 Receive line (RXD) is not busy. 1 Reception on going.
7	RCDnIFLAG	Receive Character detection Interrupt Flag. This bit is set to “1b” when the value of LPUARTn_RCDR register matches the value received in the non-error state of frame and parity. On match of them, the bit may be set even if data overrun occurs. 0 No request occurred. 1 Request occurred. This bit is cleared to ‘0’ when write ‘1’.
6	RTOnIFLAG	Receive Time Out Interrupt Flag. This bit is set to “1b” at the counter underflow of the receive time out controller. 0 No request occurred. 1 Request occurred, This bit is cleared to ‘0’ when write ‘1’.
4	SBDnIFLAG	Start Bit Detection Interrupt Flag. This bit is set to “1b” when a start bit is detected in DEEP SLEEP mode. 0 No request occurred. 1 Request occurred. This bit is cleared to ‘0’ when write ‘1’.
2	TXCnIFLAG	Transmit Complete Interrupt Flag. This flag is set to “1b” when the data in the transmit shift register has been shifted out. 0 No request occurred. 1 The data in the transmit shift register are shifted out completely. This bit is cleared to ‘0’ when write ‘1’.
0	RXCnIFLAG	Receive Data Register Not Empty Interrupt Flag. This bit is set to “1b” when the data in the receive shift register has been transferred to the LPUARTn_RDR register. The bit is cleared by a read to the LPUARTn_RDR register. 0 No request occurred.

	1	There is data in the receive data register. This bit is cleared to ‘0’ when write ‘1’.

17.3.5 LPUARTn_RDR: LPUARTn receive data register

LPUARTn_RDR register is 32-bit size and accessible in 32/16/8-bit. (n = 0)

LPUART0_RDR=0x4000_5C18

31 30 29 28 27 26 25 24	23 22 21 20 19 18 17 16	15 14 13 12 11 10 9 8	7 6 5 4 3 2 1 0
Reserved			**RDATA**
0x000000			**0x00**
-			**RO**

7 0	RDATA	Receive Data. A receive shift register is moved to this register after stop bit.

17.3.6 LPUARTn_TDR: LPUARTn transmit data register

LPUARTn_TDR register is 32-bit size and accessible in 32/16/8-bit. (n = 0)

LPUART_TDR0=0x4000_5C1C

31 30 29 28 27 26 25 24	23 22 21 20 19 18 17 16	15 14 13 12 11 10 9 8	7 6 5 4 3 2 1 0
Reserved			**TDATA**
0x000000			**0x00**
-			**RW**

7 0	TDATA	Transmit Data bits. This register is moved to the transmit shift register after a previous character is completely shifted out.

17.3.7 LPUARTn_BDR: LPUARTn baud rate generation register

LPUARTn_BDR register is 32-bit size and accessible in 32/16/8-bit. (n = 0)

LPUART0_BDR=0x4000_5C20

31 30 29 28 27 26 25 24	23 22 21 20 19 18 17 16	15 14 13 12 11 10 9 8	7 6 5 4 3 2 1 0
Reserved		BDATA	
0x0000		0xFFFF	
-		RW	

15 0	BDATA	These bits are used to generate baud rate. 16 oversampling: — Baud Rate = f_{LPUART}/{16 x (BDATA[15:0] +1)} — BDATA[15:0] range: 0x0 to 0xFFFF 8 oversampling: — Baud Rate = f_{LPUART}/{8 x (BDATA[15:0] +1)} — BDATA[15:0] range: 0x0 to 0xFFFF No oversampling: This can be used with XSOSC (32.768kHz). — Baud Rate = f_{LPUART}/(BDATA[15:0] +1) — BDATA[15:0] range: 0x2 to 0xFFFF — If this register is 0x0002 on the no oversampling, the LPUARTn_BCMP[15] bit (BCMPS) shouldn't be set to "1b" for minus compensation.

17.3.8 LPUARTn_BCMP: LPUARTn baud rate compensation register

LPUARTn_BCMP register is 32-bit size and accessible in 32/16/8-bit. (n = 0)

LPUART0_BCMP=0x4000_5C24

31 30 29 28 27 26 25 24	23 22 21 20 19 18 17 16	15	14 13 12 11 10 9	8	7	6	5	4	3	2	1	0
Reserved		BCMPS	Reserved	BCMP8	BCMP7	BCMP6	BCMP5	BCMP4	BCMP3	BCMP2	BCMP1	BCMP0
0x0000		0	0 0 0 0 0 0	0	0	0	0	0	0	0	0	0
–		RW	– – – – – –	RW	RW	RW	RW	RW	RW	RW	RW	RW

15	BCMPS	Baud Rate Compensation Sign.
		0 Plus 1 clock for compensation.
		1 Minus 1 clock for compensation.
x	BCMPx	Baud Rate Compensation bits. x: 0 to 8.
		0 No compensation.
		1 1 clock compensation with sign bit (BCMPS).

17.3.9 LPUARTn_RTODR: LPUARTn receive time out data register

LPUARTn_RTODR register is 32-bit size and accessible in 32/16/8-bit. (n = 0)

LPUART0_RTODR=0x4000_5C28

31 30 29 28 27 26 25 24	23 22 21 20 19 18 17 16	15 14 13 12 11 10 9 8	7 6 5 4 3 2 1 0
Reserved	RTOD		
0x00	0x00FFFF		
-	RW		

23 0	RTOD	LPUARTn Receive Time Out Data

17.3.10 LPUARTn_RCDR: LPUARTn receive character detection data register

LPUARTn_RCDR register is 32-bit size and accessible in 32/16/8-bit. (n = 0)

LPUART0_RCDR=0x4000_5C2C

31 30 29 28 27 26 25 24	23 22 21 20 19 18 17 16	15 14 13 12 11 10 9 8	7 6 5 4 3 2 1 0
Reserved			RCDD
0x000000			0x00
-			RW

7 0	RCDD	LPUARTn Receive Character Detection Data.

17.3.11 LPUARTn_DLYDR: LPUARTn Tx delay time data register

LPUARTn_DLYDR register is 32-bit size and accessible in 32/16/8-bit. (n = 0)

LPUART0_DLYDR=0x4000_5C30

31 30 29 28 27 26 25 24	23 22 21 20 19 18 17 16	15 14 13 12 11 10 9 8	7 6 5 4 3 2 1 0
Reserved			DLYD
0x000000			0x00
–			RW

7 0	DLYD	LPUARTn Tx Delay Data. This register is used for transmit delay time between the last stop bit and the next start bit with baud rate unit. The data in the LPUARTn_TDR register will be transferred to the transmit shift register after delay time. Delay time: DLYD[7:0] x “baud rate clock period”. No delay on DLYD[7:0] = 0.

17.4 Functional description

The LPUARTn block comprises a clock generator, a transmitter and a receiver.

The clock generation logic consists of a baud rate generator.

The transmitter consists of a write buffer, a serial shift register, a parity generator, and a control logic.

The receiver is the most complex part of the low power UARTn module due to its clock and data recovery units. The recovery unit is used for asynchronous data reception. In addition, the receiver has a parity checker, a shift register, and a control logic. The receiver supports the same frame formats as the transmitter and can detect frame error, data overrun and parity errors.

17.4.1 LPUARTn clock generation

The clock generation logic generates clocks for the transmitter and the receiver. The LPUARTn baud rate generator supports three modes of clock operation, which are 16 oversampling mode, 8 oversampling mode, and only 1 sampling mode. The only 1 sampling mode can be used with XSOSC (32.768kHz).

Table 73 shows equations for baud rate calculation (in bps).

Table 73. Equations for Calculating Baud Rate Register Settings

Oversampling	Equation for calculating baud rate
16 oversampling mode (OVRS = 00b)	Baud Rate = f_{LPUART}/(16(LPUARTn_BDR+1))
8 oversampling mode (OVRS = 01b)	Baud Rate = f_{LPUART}/(8(LPUARTn_BDR+1))
Only 1 sampling mode (OVRS = 10b)	Baud Rate = f_{LPUART}/(LPUARTn_BDR+1)

17.4.2 LPUARTn baud rate compensation

The baud rate compensation is used to optimize the precision in each bit. There is a sign (BCMPS bit of LPUARTn_BCMP register) bit to define the positive or negative compensation in each bit. If the sign bit is “0b”, one clock of fLPUARTn will be appended to the compensated bit. If the sign bit is “1b”, one clock of fLPUARTn will be taken out from the compensated bit.

There are nine bits to define whether the relative compensation is required for each bit. The bits are BCMP[7:0] for data and BCMP8 for parity.

Example

1. fLPUARTn = 32.768kHz, No oversampling, Baud rate = 9600 bps

   32.768kHz/(1 x 9600) = 3.413, LPUARTn_BDR = 3 - 1 = 2, and “Baud rate clock”/bit = 3 x 1

   So, “Clock error”/bit: 3.413 x 1 - 3 x 1 = 0.413 clock → “1 clock compensation”/bit if a BCMPx bit is “1b”.

   The result is that the sign bit, BCMPS, is “0b” for positive compensation and the baud rate compensation bits, BCMP[8:0], are “010100101b”. (CEPB: “clock error”/bit)

Table 74. Baud Rate Compensation Example 1

Rx/Tx bit	BCMPx bit	Clock Error	Compensation bit	Final clock error
Start bit	–	-0.413 (CEPB)	x	-0.413
D0	bit 0	-0.827 (CEPB+ before compensation)	1	0.173
D1	bit 1	-0.240 (CEPB+ before compensation)	0	-0.240
D2	bit 2	-0.653 (CEPB+ before compensation)	1	0.347
D3	bit 3	-0.067 (CEPB+ before compensation)	0	-0.067
D4	bit 4	-0.480 (CEPB+ before compensation)	0	-0.480
D5	bit 5	-0.893 (CEPB+ before compensation)	1	0.107
D6	bit 6	-0.307 (CEPB+ before compensation)	0	-0.307
D7	bit 7	-0.720 (CEPB+ before compensation)	1	0.280
Parity bit	bit 8	-0.133 (CEPB+ before compensation)	0	-0.133

2. fLPUARTn = 32.768kHz, No oversampling, Baud rate = 2400 bps

   32.768kHz/(1 x 2400) = 13.653, LPUARTn_BDR = 14 - 1 = 13, and “Baud rate clock”/bit = 14 x 1

   So, “Clock error”/bit: 13.653 x 1 - 14 x 1 = - 0.347 clock → “1 clock compensation”/bit if a BCMPx bit is “1b”.

   The result is that the sign bit, BCMPS, is “1b” for negative compensation and the baud rate compensation bits, BCMP[8:0], are “001001001b”. (CEPB: “clock error”/bit)

Table 75. Baud Rate Compensation Example 2

Rx/Tx bit	BCMPx bit	Clock Error	Compensation bit	Final Clock Error
Start bit	–	+0.347 (CEPB)	x	0.347
D0	bit 0	0.693 (CEPB+ before compensation)	1	-0.307
D1	bit 1	0.040 (CEPB+ before compensation)	0	0.040
D2	bit 2	0.387 (CEPB+ before compensation)	0	0.387
D3	bit 3	0.733 (CEPB+ before compensation)	1	-0.267
D4	bit 4	0.080 (CEPB+ before compensation)	0	0.080
D5	bit 5	0.427 (CEPB+ before compensation)	0	0.427
D6	bit 6	0.773 (CEPB+ before compensation)	1	-0.227
D7	bit 7	0.120 (CEPB+ before compensation)	0	0.120
Parity bit	bit 8	0.467 (CEPB+ before compensation)	0	0.467

17.4.3 LPUARTn interface data format

A serial frame is defined to be composed of one character of data bits with synchronization bits (start and stop bits) and an optional parity bit for error detection.

The LPUARTn supports all 24 combinations of the followings as valid frame formats.

- 1 start bit
- 5, 6, 7, or 8 data bits
- No, even, or odd parity bit.
- 1 or 2 stop bits.

A frame starts with the start bit followed by the least significant data bit (LSB). Then the next data bits, up to eight, follow, ending with the most significant bit (MSB). If parity function is enabled, the parity bit is inserted between the last data bit and the stop bit.

A high-to-low transition on data pin is considered as start bit. When a complete frame is transmitted, it can be directly followed by a new frame, or the communication line can be set to an idle state. The idle state means high state of data pin. The following figure shows the possible combinations of the frame formats. Bits inside round brackets are optional.

Figure 83. Frame Format

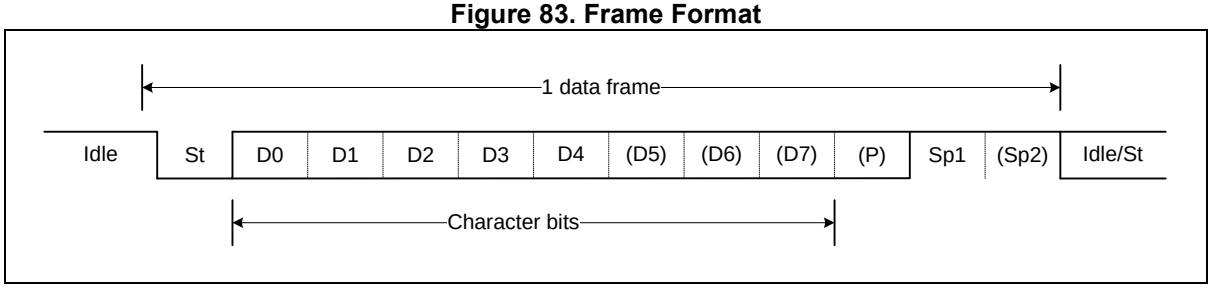

1 data frame consists of the following bits:

- Idle: No communication on communication line (LPTXDn/LPRXDn)
- St: Start bit (Low)
- Dm: Data bits (0 ~ 7)
- P: Parity bit (even parity, odd parity, no parity)
- Sp: Stop bit (1 bit or 2 bits)

The frame format is set by configuring DLEN[1:0], PSEL, PEN, and STOPB bits in the LPUARTn_CR1 register. The transmitter and the receiver use the same values.

17.4.4 LPUARTn interface parity bit

The parity bit is calculated by doing an exclusive-OR of all data bits. If odd parity is used, the result of the exclusive-OR is inverted. The parity bit is located between the last data bit and first stop bit of a serial frame.

- Peven = Dm-1 ^ … ^ D3 ^ D2 ^ D1 ^ D0 ^ 0
- Podd = Dm-1 ^ … ^ D3 ^ D2 ^ D1 ^ D0 ^ 1
- Peven: Parity bit using even parity
- Podd: Parity bit using odd parity
- Dm: Data bit n of the character

17.4.5 LPUARTn transmitter

The LPUARTn transmitter is enabled by setting the TXE bit in LPUARTn_CR1 register. When the transmitter is enabled, the LPTXDn pin should be set to LPTXDn function for the serial output pin by the GPIO registers.

Baud-rate, operation mode and frame format must be set up before doing any transmission.

17.4.5.1 LPUARTn sending TX data

A data transmission is initiated by loading data to the transmit data register (LPUARTn_TDR register). The data to be written in transmit data register is moved to the shift register when the shift register is ready to send a new frame.

The shift register is loaded with the new data if it is in idle state or immediately after the last stop bit of the previous frame is transmitted. When the shift register is loaded to the new data, it will transfer one complete frame according to the settings of control registers. (n = 0)

17.4.5.2 LPUARTn parity generator

The parity generator calculates parity bit for the serial frame data to be sent. When the parity bit is enabled (PENn = 1), the transmitter control logic inserts the parity bit between the last data bit and the first stop bit of the frame to be sent.

17.4.6 LPUARTn receiver

The LPUARTn receiver is enabled by setting the RXE bit in the LPUARTn_CR1 register. When the receiver is enabled, the LPRXDn pin should be set to LPRXDn function for the serial input pin by the GPIO registers.

Baud-rate, operation mode, and frame format must be set before the serial reception.

17.4.6.1 LPUARTn receiving RX data

The receiver starts data reception when it detects a valid start bit (LOW) on LPRXDn pin. Each bit after start bit is sampled at predefined baud-rate, and shifted into the receive shift register until the first stop bit of a frame is received.

Even if there is the second stop bit in the frame, the second stop bit is ignored by the receiver. That is, receiving the first stop bit means that a complete serial frame is presented in the receiver shift register and contents of the shift register are to be moved into the receive data register.

17.4.6.2 LPUARTn parity checker

If the parity bit is enabled (PEN = 1), the Parity Checker calculates the parity of the data bits in incoming frame and compares the result with the parity bit from the received serial frame.

17.4.6.3 LPUARTn data reception

To receive data frame, the receiver includes a clock and data recovery unit. The clock recovery logic is used for synchronizing the internally generated baud-rate clock to the incoming asynchronous serial frame on the LPRXDn pin.

The data recovery logic samples and filters the incoming bits with a low pass filter, and removes the noise of receive pin.

Figure 84 illustrates the sampling process of a start bit of an incoming frame. The sampling rate is 16 times the baud rate in 16 oversampling mode and 8 times the baud rate for 8 oversampling mode. The horizontal arrows show the synchronization variation due to the asynchronous sampling process. Note that larger time variation is seen when using 8 oversampling mode.

Figure 84. Start Bit Sampling

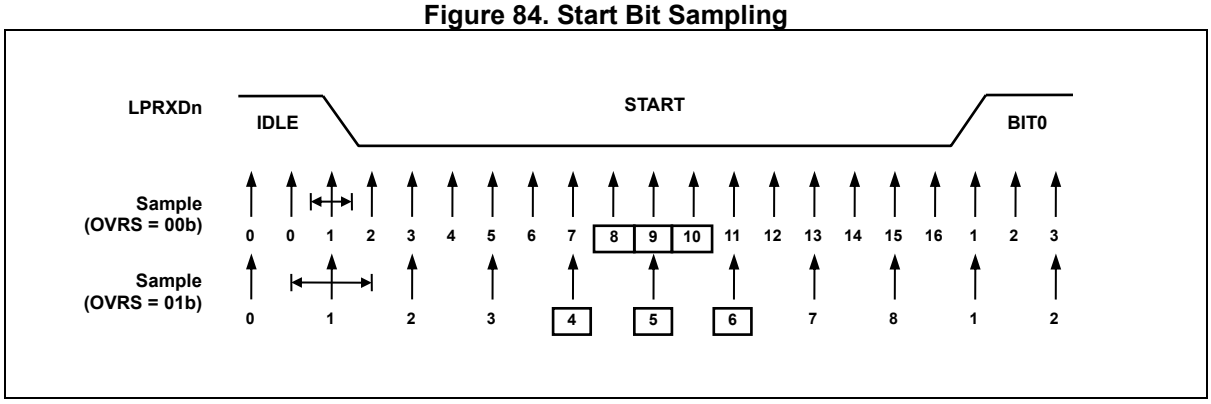

When the receiver is enabled (RXEn=1), the clock recovery logic tries to find a high-to-low transition on the LPRXDn line, the start bit condition. After detecting high to low transition on the line, the clock recovery logic uses samples 8, 9 and 10 for 16 oversampling mode to detect whether valid start bit is received.

If more than 2 samples have logical low level, it is considered that a valid start bit is detected and the internally generated clock is synchronized to the incoming data frame. Then the data recovery can begin. The synchronization process is repeated for each start bit.

As described above, when the receiver clock is synchronized to the start bit, the data recovery can begin. Data recovery process is almost the same as clock recovery process. The data recovery logic samples each incoming bit 16 times for 16 oversampling mode and 8 times for 8 oversampling mode, and uses sample 8, 9 and 10 to decide data value. If more than 2 samples have low levels, the received bit is considered as a logic ‘0’ and if more than 2 samples have high levels, the received bit is considered as a logic ‘1’.

The data recovery process is then repeated until a complete frame is received, including the first stop bit. The decided bit value is stored in the receive shift register in order.

Note that the receiver only uses the first stop bit of a frame. Internally, after receiving the first stop bit, the receiver is in idle state and waits to find the start bit.

Figure 85. Sampling of Data and Parity Bit

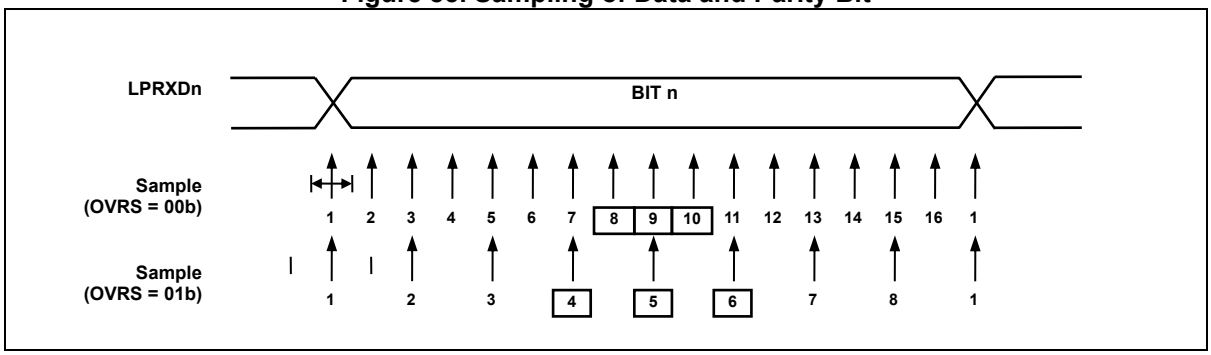

The process for detecting stop bit is the same as clock and data recovery process. That is, if 2 or more samples of 3 center values have high level, correct stop bit is detected, or else a frame error (FE) flag is set.

After deciding whether the first stop bit is valid or not, the receiver goes to idle state and monitors the LPRXDn line to check whether a valid high to low transition is detected (start bit detection).

Figure 86. Stop Bit Sampling and Next Start Bit Sampling

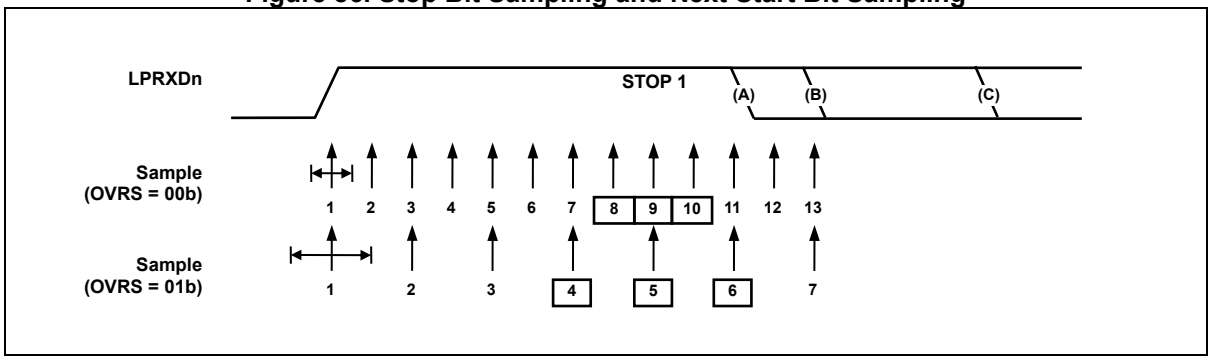

17.4.6.4 LPUARTn receive time out function

The receive time out function is used for checking a frame finish. This function is to count time with baud rate unit between the last start bit and a new start bit, and between setting the RTOEN bit of the LPUARTn_CR register and a new start bit. The LPUARTn_RTODR register should have duration time value before using the receive time out function.

Figure 87. Receive Time Out Function

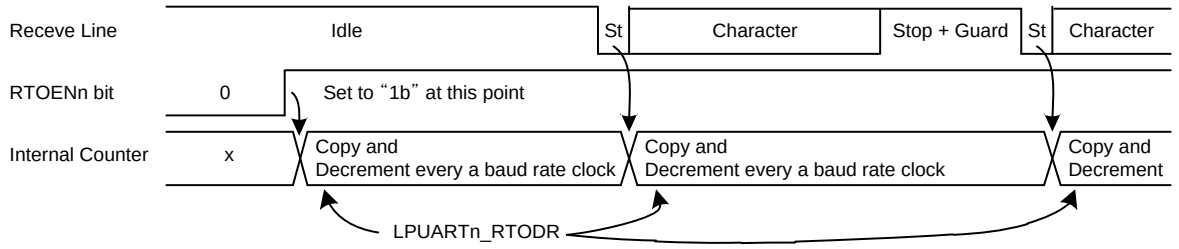

NOTES:

1. The value of LPUARTn_RTODR register is transferred to an internal counter when the RTOENn bit is set to "1b" or when a start bit is received to.
2. If the RTOEN bit is set to "1b", the internal counter counts down until underflow.
3. The RTOnIFLAG bit of LPUARTn_IFSR register is set to "1b" on the internal counter underflow and the receive time out function is finished. So, to re-use the receive time out function, the RTOEN bit must be cleared to "0b" and then set to "1b" again.

17.4.6.5 1-wire half-duplex communication

1-wire half-duplex mode is selected by configuring HDCOM bit in the LPUARTn_CR1 register. The TXDn and the RXDn lines are internally connected, the RXDn pin is not used, and the TXDn pin is always an input when no transmitted. So, the TXDn pin must be configured to open-drain with an external pull-up resistor.

18 I2C 0 interface

I2C is one of industrial standard serial communication protocols, which uses 2 bus lines, Serial Data Line (SDAn) and a Serial Clock Line (SCLn). These are used to exchange data.

Because both of the SDAn and SCLn lines are open-drain outputs, each line needs a pull-up resistor (n = 0).

The I2C interface 0 of the A31L22x series features the followings:

- Compatible with I2C bus standard
- Multi-master operation
- Up to 1MHz data transfer read speed
- 7-bit address
- Two slave addresses supported
- Master and slave operations
- Bus busy detection

18.1 I2C 0 block diagram

Figure 88 shows a block diagram of the I2C block.

Figure 88. I2C Block Diagram (n = 0)

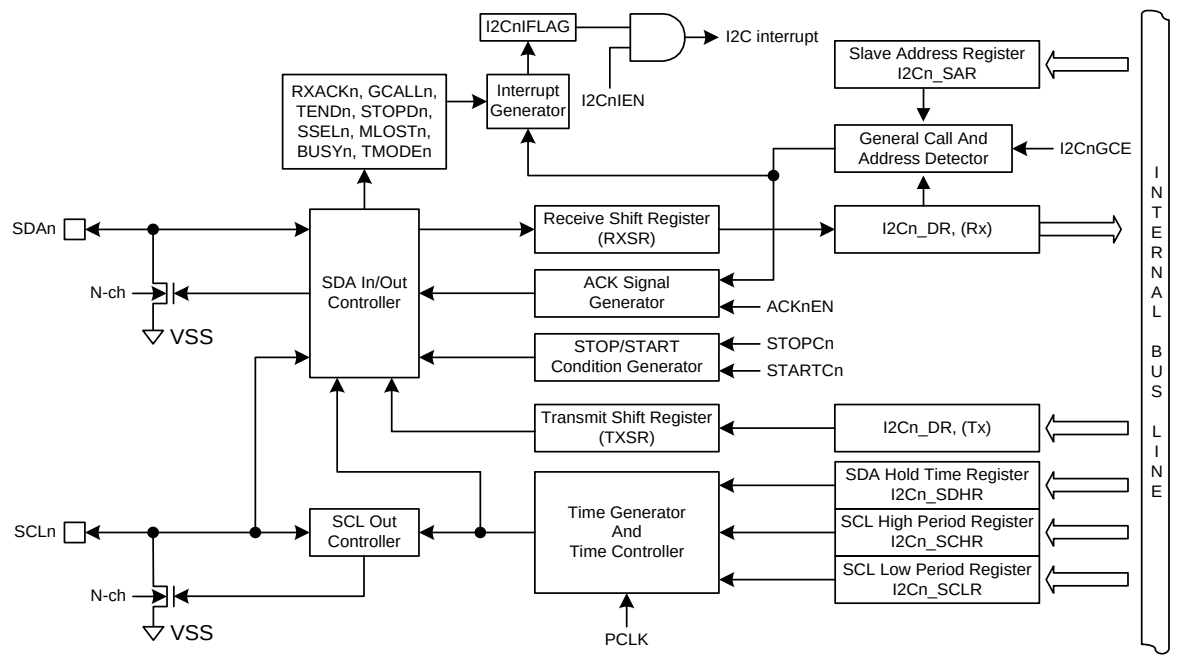

NOTE: When the corresponding port of I2C is a sub-function for SCLn/SDAn pin, the SCLn/SDAn pins are automatically set as N-channel open-drain outputs and the input latch is read when reading the pins. The corresponding pull-up resistor is determined by the control register.

18.2 Pin description for I2C 0

Table 76. Pins and External Signals for I2C (n = 0)

Pin name	Type	Description
SCLn	I/O	I2C channel n Serial clock bus line (open-drain)
SDAn	I/O	I2C channel n Serial data bus line (open-drain)

18.3 Registers

Base address and register map of the I2C 0 are shown in Table 77 and Table 78.

Table 77. Base Address of I2C Interface

Name	Base address	Size	Description
I2C0	0x4000_4800	256	I2C0 Block

Table 78. I2C Register Map (n = 0)

Name	Offset	Type	Description	Reset Value
I2Cn_CR	0x00	RW	I2Cn Control Register	0x00000000
I2Cn_ST	0x04	RW	I2Cn Status Register	0x00000000
I2Cn_SAR1	0x08	RW	I2Cn Slave Address Register 1	0x00000000
I2Cn_SAR2	0x0C	RW	I2Cn Slave Address Register 2	0x00000000
I2Cn_DR	0x10	RW	I2Cn Data Register	0x00000000
I2Cn_SDHR	0x14	RW	I2Cn SDA Hold Time Register	0x00000001
I2Cn_SCLR	0x18	RW	I2Cn SCL Low Period Register	0x0000003F
I2Cn_SCHR	0x1C	RW	I2Cn SCL High Period Register	0x0000003F

18.3.1 I2Cn_CR: I2Cn control register

The register can be set to configure I2C operation mode activate I2C transactions.

I2Cn_CR register is 32-bit size and accessible in 32/16/8-bit. (n = 0)

I2C0_CR=0x4000_4800

31 30 29 28 27 26 25 24	23 22 21 20 19 18 17 16	15 14 13 12 11 10 9 8	7	6	5	4	3	2	1	0
Reserved			**I2CnEN**	**TXDLYENBn**	**I2CnIEN**	**I2CnIFLAG**	**ACKnEN**	**IMASTERn**	**STOPCn**	**STARTCn**
0x000000			**0**	**0**	**0**	**0**	**0**	**0**	**0**	**0**
-			**RW**	**RW**	**RW**	**RO**	**RW**	**RO**	**RW**	**RW**

7	I2CnEN	Activate I2Cn Block. 0 Disable I2Cn block. 1 Enable I2Cn block.
6	TXDLYENBn	I2Cn_SDHR Register Control. 0 Enable I2Cn_SDHR register. 1 Disable I2Cn_SDHR register.
5	I2CnIEN	I2Cn Interrupt Enable. 0 Disable I2Cn interrupt. 1 Enable I2Cn interrupt.
4	I2CnIFLAG	I2Cn Interrupt Flag. This bit is cleared when all interrupt source bits in the I2Cn_ST register are cleared to ‘0’. 0 No request occurred. 1 Request occurred.
3	ACKnEN	Controls ACK signal generation at ninth SCL period. 0 No ACK signal is generated. (SDA = 1) 1 ACK signal is generated. (SDA = 0) **NOTES**: ACK signal is output (SDA = 0) for the following 3 cases. — When received address packet is equal to SLAn[6:0] bits in I2Cn_SAR1/I2Cn_SAR2 register. — When received address packet is equal to value 0x00 with GCALLn enabled. — When I2Cn operates as a receiver (master or slave)
2	IMASTERn	Represents Operation Mode of I2Cn. This bit is cleared to ‘0’ on STOP condition. 0 I2Cn is in slave mode. 1 I2Cn is in master mode.
1	STOPCn	STOP Condition Generation When I2Cn is master. 0 No effect. 1 Generate STOP condition.
0	STARTCn	START Condition Generation When I2Cn is master. 0 No effect. 1 Generate START or Repeated START condition.

18.3.2 I2Cn_ST: I2Cn status register

I2Cn_ST register is 32-bit size and accessible in 32/16/8-bit. (n = 0)

I2C0_ST=0x4000_4804

31 30 29 28 27 26 25 24	23 22 21 20 19 18 17 16	15 14 13 12 11 10 9 8	7	6	5	4	3	2	1	0
Reserved			GCALLn	TENDn	STOPDn	SSELn	MLOSTn	BUSYn	TMODEn	RXACKn
0x000000			0	0	0	0	0	0	0	0
-			RW	RW	RW	RW	RW	RW	RO	RW

7	GCALLn	This bit has different meaning depending on whether I2C is master or slave. When I2C is a master, this bit represents whether it received AACK (address ACK) from slave.
		0 No AACK is received. (Master mode)
		1 AACK is received (Master mode). It may be set to '1' after address transmission.
		When I2C is a slave, this bit is used to indicate general call.
		0 General call address is not detected. (Slave mode)
		1 General call address is detected. (Slave mode)
6	TENDn	This bit is set when 1-byte of data is transferred completely.
		0 1 byte of data is not completely transferred.
		1 1 byte of data is completely transferred.
5	STOPDn	This bit is set when a STOP condition is detected.
		0 A STOP condition is not detected.
		1 A STOP condition is detected.
		NOTE: A STOP condition is not detected on unaddressed slaves.
4	SSELn	This bit is set when I2C is addressed by other master.
		0 I2C is not selected as a slave.
		1 I2C is addressed by other master and acts as a slave.
3	MLOSTn	This bit represents the result of bus arbitration in master mode.
		0 I2C maintains bus mastership.
		1 I2C has lost bus mastership during arbitration process.
2	BUSYn	This bit reflects bus status.
		0 I2C bus is idle, so a master can issue a START condition.
		1 I2C bus is busy.
1	TMODEn	This bit is used to indicate whether I2C is transmitter or receiver.
		0 I2C is a receiver.
		1 I2C is a transmitter.
0	RXACKn	This bit shows the state of ACK signal.
		0 No ACK is received.
		1 ACK is received at ninth SCL period.

NOTES:

1. The GCALLn, TENDn, STOPDn, SSELn, and MLOSTn bits can be source of interrupt.
2. When an I2C interrupt occurs except for DEEP SLEEP mode, the SCL line is held low. To release SCL, Clear to "0b" all interrupt source bits in I2Cn_ST register.
3. The GCALLn, TENDn, STOPDn, SSELn, MLOSTn, and RXACKn bits are cleared when '1' is written to the corresponding bit.

18.3.3 I2Cn_SAR1: I2Cn slave address register 1

I2Cn_SAR1 register is 32-bit size and accessible in 32/16/8-bit. (n = 0)

I2C0_SAR1=0x4000_4808

31 30 29 28 27 26 25 24	23 22 21 20 19 18 17 16	15 14 13 12 11 10 9 8	7 6 5 4 3 2 1	0
Reserved			SLAn	GCALLnEN
0x000000			0000000	0
-			RW	RW

7 1	SLAn	These bits configure the slave address 1 in slave mode.
0	GCALLnEN	This bit decides whether I2Cn allows general call address 1 or not in I2Cn slave mode. 0 Ignore general call address 1. 1 Allow general call address 1.

18.3.4 I2Cn_SAR2: I2Cn slave address register 2

I2Cn_SAR2 register is 32-bit size and accessible in 32/16/8-bit. (n = 0)

I2C0_SAR2=0x4000_480C

31 30 29 28 27 26 25 24	23 22 21 20 19 18 17 16	15 14 13 12 11 10 9 8	7 6 5 4 3 2 1	0
Reserved			SLAn	GCALLnEN
0x000000			0000000	0
-			RW	RW

7 1	SLAn	These bits configure the slave address 2 in slave mode.
0	GCALLnEN	This bit decides whether I2Cn allows general call address 2 or not in I2Cn slave mode. 0 Ignore general call address 2. 1 Allow general call address 2.

18.3.5 I2Cn_DR: I2Cn data register

I2Cn_DR register is 32-bit size and accessible in 32/16/8-bit. (n = 0)

I2C0_DR=0x4000_4810

31 30 29 28 27 26 25 24	23 22 21 20 19 18 17 16	15 14 13 12 11 10 9 8	7 6 5 4 3 2 1 0
Reserved			DATA
0x000000			0x00
-			RW

7 0	DATA	The I2Cn_DR Transmit buffer and Receive buffer share the same I/O address with this DATA register. The Transmit Data Buffer is the destination for data written to the I2Cn_DR register. Reading the I2Cn_DR register returns the contents of the Receive Buffer.

18.3.6 I2Cn_SDHR: I2Cn SDA hold time register

I2Cn_SDHR register is 32-bit size and accessible in 32/16/8-bit. (n = 0)

I2C0_SDHR=0x4000_4814

31 30 29 28 27 26 25 24	23 22 21 20 19 18 17 16	15 14 13 12 11 10 9 8	7 6 5 4 3 2 1 0
Reserved			HLDT
0x00000			0x001
-			RW

11 0	HLDT	This register is used to control SDA output timing from the falling edge of SCL. Note that SDA is changed after tPCLK X (I2Cn_SDHR+2). In master mode, load half the value of I2Cn_SCLR to this register to make SDA switch in the middle of SCL. In slave mode, configure this register regarding the frequency of SCL from master. The SDA is changed after tPCLK X (I2Cn_SDHR+2) in master mode. So, to ensure proper operation in slave mode, the value tPCLK X (I2Cn_SDHR + 2) must be smaller than the period of SCL.

18.3.7 I2Cn_SCLR: I2Cn SCL low period register

I2Cn_SCLR register is 32-bit size and accessible in 32/16/8-bit. (n = 0)

I2C0_SCLR=0x4000_4818

31 30 29 28 27 26 25 24	23 22 21 20 19 18 17 16	15 14 13 12	11 10 9 8	7 6 5 4 3 2 1 0
Reserved			SCLL	
0x00000			0x03F	
-			RW	

11 0	SCLL	This register defines the low period of SCL in master mode. The base clock is PCLK and the period is calculated by the formula: tPCLK X (4 X I2Cn_SCLR + 3) where tPCLK is the period of PCLK.

18.3.8 I2Cn_SCHR: I2Cn SCL high period register

I2Cn_SCHR register is 32-bit size and accessible in 32/16/8-bit. (n = 0)

I2C0_SCHR=0x4000_481C

31 30 29 28 27 26 25 24	23 22 21 20 19 18 17 16	15 14 13 12	11 10 9 8	7 6 5 4 3 2 1 0
Reserved			SCLH	
0x00000			0x03F	
-			RW	

11 0	SCLH	This register defines the high period of SCL in master mode. The base clock is PCLK and the period is calculated by the formula: tPCLK X (4 X I2Cn_SCHR + 3) where tPCLK is the period of PCLK.

18.4 Functional description

18.4.1 I2C bit transfer

The data on the SDAn line must be stable during HIGH period of the clock, SCLn. The HIGH or LOW state of the data line can only change when the clock signal on the SCLn line is LOW. The exceptions are START(S), repeated START(Sr), and STOP(P) condition, where data line changes when clock line is high.

Figure 89. I2C Bus Bit Transfer (n = 0)

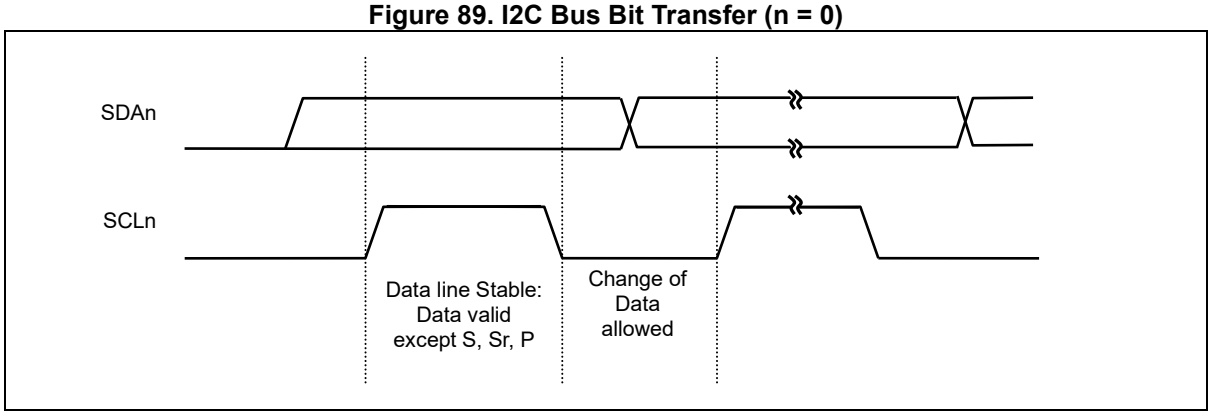

18.4.2 START/Repeated START/STOP

One master can issue a START (S) condition to detect other devices connected to the SCLn, SDAn lines that will use the bus. A STOP (P) condition is generated by the master to release the bus lines so that other devices can use it.

- A high to low transition on the SDAn line while SCLn is high defines a START (S) condition.
- A low to high transition on the SDAn line while SCLn is high defines a STOP (P) condition.

START and STOP conditions are always generated by the master. The bus is considered to be busy after START condition. The bus is considered to be free again after STOP condition, i.e., the bus is busy between START and STOP condition. If a repeated START condition (Sr) is generated instead of STOP condition, the bus stays in busy mode. So, the START and repeated START conditions are functionally identical.

Figure 90. START and STOP Conditions (n = 0)

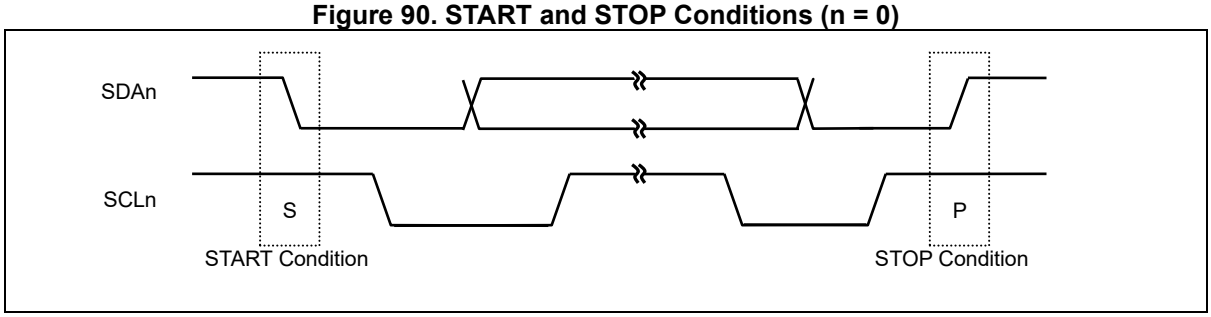

18.4.3 Data transfer

Every byte on the SDAn line must be 8-bits long, but the number of bytes that can be transmitted per transfer is unlimited.

Each byte has to be followed by an acknowledge bit. Data is transferred with the most significant bit (MSB) first. If a slave cannot receive or transmit another complete byte of data until it has performed some other function, it can hold the clock line SCLn LOW to force the master into a wait state.

Data transfer then continues when the slave is ready for another byte of data and releases clock line SCLn.

Figure 91. I2C Bus Data Transfer (n = 0)

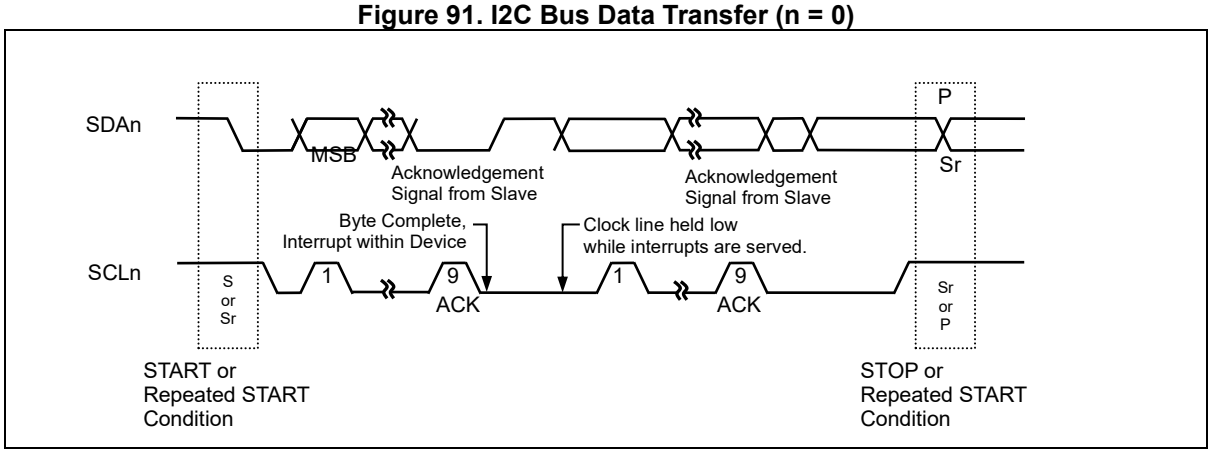

18.4.4 Acknowledge

An acknowledge clock pulse is generated by the master. The transmitter releases the SDAn line (HIGH) during the acknowledge clock pulse. The receiver must pull down the SDAn line during the acknowledge clock pulse so that it remains stable at LOW during the HIGH period of this clock pulse.

When a slave is addressed by a master (Address Packet), and if it is unable to receive or transmit because it is performing some real time function, the data line must be left HIGH by the slave.

In addition, when a slave addressed by a master is unable to receive more data bits, the slave receiver must release the SDAn line (Data Packet). The master can then generate either a STOP condition to abort the transfer, or a repeated START condition to start a new transfer.

If a master receiver is involved in a transfer, it must signal the end of data to the slave transmitter by not generating an acknowledge on the last byte that was clocked out of the slave. The slave transmitter must release the data line to allow the master to generate a STOP or repeated START condition.

Figure 92. I2C Bus Acknowledge (n = 0)

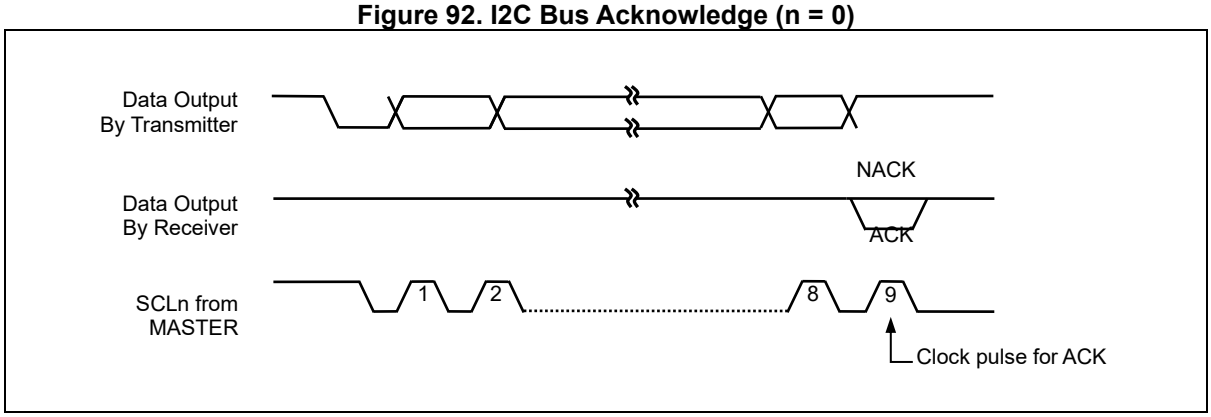

18.4.5 Synchronization/arbitration

Clock synchronization is performed using the wired-AND connection of I2C interfaces to the SCLn line. This means that a HIGH to LOW transition on the SCLn line will cause the devices concerned to start counting off their LOW period and it will hold the SCLn line in that state until the clock HIGH state is reached.

However the LOW to HIGH transition of this clock may not change the state of the SCLn line if another clock is still within its LOW period. In this way, a synchronized SCLn clock is generated with its LOW period determined by the device with the longest clock LOW period, and its HIGH period determined by the one with the shortest clock HIGH period. A master may start a transfer only if the bus is free. Two or more masters may generate a START condition.

Arbitration takes place on the SDAn line, while the SCLn line is at the HIGH level, in such a way that a master that transmits a HIGH level, while another master that transmits a LOW level, will switch off its DATA output state because the level on the bus does not correspond to its own level.

Arbitration continues for many bits until a winning master gets the ownership of I2C bus. Its first stage is comparison of the address bits.

Figure 93. Clock Synchronization during Arbitration Procedure (n = 0)

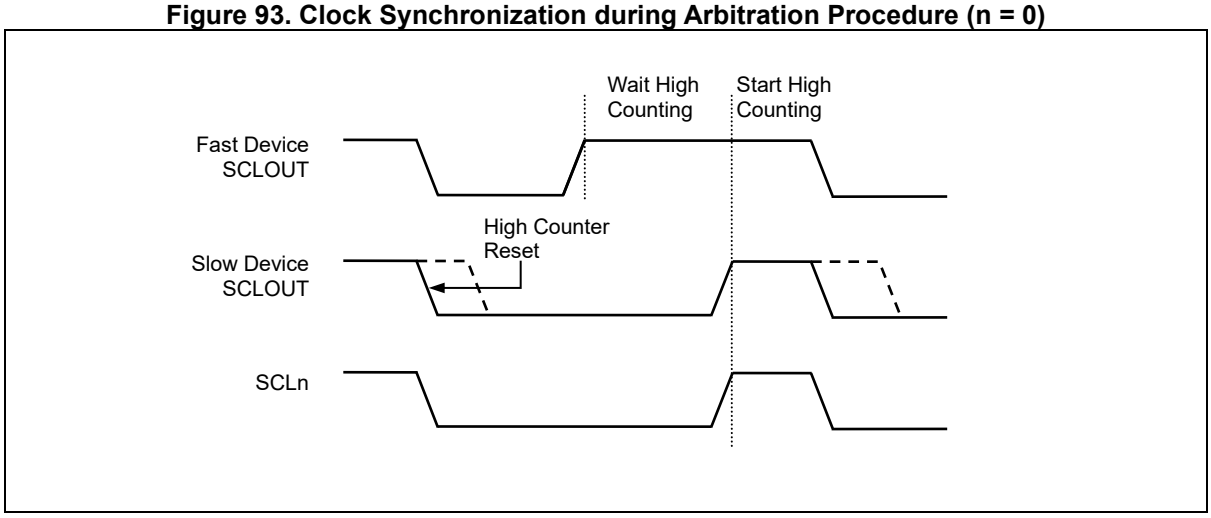

Figure 94. Arbitration Procedure between Two Masters (n = 0)

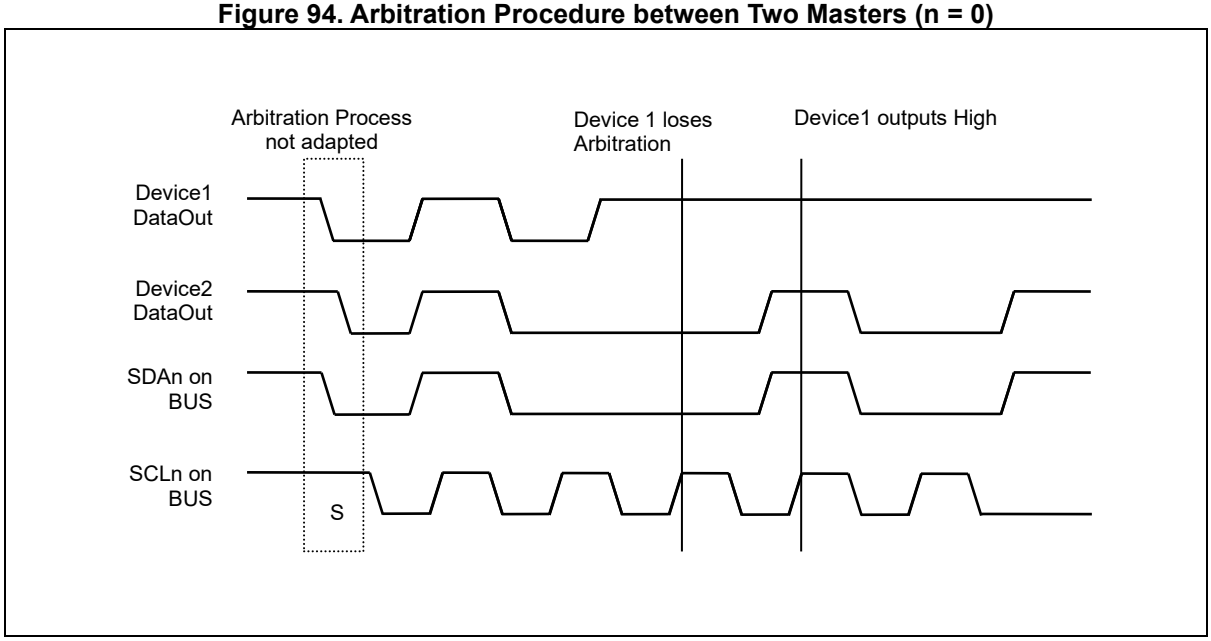

18.5 I2C operation

The I2C is byte-oriented and interrupt-based. Interrupts are issued after all bus events except for the transmission of a START condition. Since I2C is interrupt based, the application software is free to carry on with other operations during an I2C byte transfer.

Note that when an I2C interrupt is generated, I2CnIFLAG flag in I2Cn_CR register is set, and it is cleared when all interrupt source bits in the I2Cn_ST register are cleared to ‘0’. When I2C interrupt occurs, the SCLn line is held at LOW until all interrupt source bits in I2Cn_ST register are cleared to ‘0’. When the I2CnIFLAG flag is set, the I2Cn_ST contains a value indicating the current state of the I2C bus. According to the value in I2Cn_ST, software can decide what to do next.

I2C can operate in 4 modes: master/slave, transmitter/receiver. The operating mode is configured by a winning master.

A more detailed explanation follows below. (n = 0)

18.5.1 Master transmitter

To operate I2C as a master transmitter, follow the recommended steps below.

1. Enable I2C by setting I2CnEN bit in I2Cn_CR. This provides main clock to the peripheral.
2. Load SLA+W into the I2Cn_DR, where SLA is the address of slave device and W is the transfer direction from the viewpoint of master. For master transmitter, W is ‘0’. Note that I2Cn_DR is used for both address and data.
3. Configure baud rate by writing desired value to both I2Cn_SCLR and I2Cn_SCHR for the Low and High period of SCLn line.
4. Configure the I2Cn_SDHR to decide when SDAn changes value from falling edge of SCLn. If SDA should change in the middle of SCLn LOW period, load half the value of I2Cn_SCLR to the I2Cn_SDHR.
5. Set the STARTCn bit in I2Cn_CR. This transmits a START condition. Also, configure how to handle interrupt and ACK signal. When the STARTCn bit is set, 8-bit data in I2Cn_DR is transmitted out according to the baud-rate.
6. This is ACK signal processing stage for address packet transmitted by master. When 7-bit address and 1-bit transfer direction is transmitted to target slave device, the master can know whether the slave acknowledged or not in the 9th high period of SCLn. If the master gains bus mastership, I2C generates GCALL interrupt regardless of receiving ACK from the slave device. When I2C loses bus mastership during arbitration process, the MLOSTn bit in I2Cn_ST is set, and I2C waits in idle state or can be operated as an addressed slave.

To operate as a slave when the MLOSTn bit in I2Cn_ST is set, the ACKnEN bit in I2Cn_CR must be set and the received 7-bit address must match the SLAn bits in I2Cn_SAR1/2. In this case, I2C operates as a slave transmitter or a slave receiver (go to appropriate section). In this stage, I2C holds the SCLn LOW. The reason for this is to decide whether I2C should continue serial transfer or stop communication. The following steps continue, assuming that I2C does not lose mastership during the first data transfer.

I2C (Master) can choose one of the following cases regardless of receiving ACK signal from slave.

A. Master receives ACK signal from slave, so continues data transfer since slave can receive more data from master. In this case, load data to transmit to I2Cn_DR.

B. Master stops data transfer even if it receives ACK signal from slave. In this case, set the STOPC bit in I2Cn_CR.

C. Master transmits repeated START condition without checking ACK signal. In this case, load SLA+R/W into the I2Cn_DR and set STARTCn bit in I2Cn_CR.

After doing any of the actions above, clear all interrupt source bits in I2Cn_ST to ‘0’ to release SCLn line. In case of A, move to step 7. In case of B, move to step 9 to handle STOP interrupt. In case of C, move to step 6 after transmitting the data in I2Cn_DR, and if transfer direction bit is ‘1’, go to master receiver section.

7. 1-Byte of data is transmitted. During data transfer, bus arbitration continues.

8. This is ACK signal processing stage for data packet transmitted by master. I2C holds the SCLn LOW. When I2C loses bus mastership while transmitting data to arbitrate other masters, the MLOSTn bit in I2Cn_ST is set. If then, I2C waits in idle state. When the data in I2Cn_DR is transmitted completely, I2C generates TENDn interrupt.

   I2C can choose one of the following cases regardless of receiving ACK signal from slave.

   A. Master receives ACK signal from slave, so continues data transfer since slave can receive more data from master. In this case, load data to transmit to I2Cn_DR.

   B. Master stops data transfer even if it receives ACK signal from slave. In this case, set the STOPCn bit in I2Cn_CR.

   C. Master transmits repeated START condition without checking ACK signal. In this case, load SLA+R/W into the I2Cn_DR and set the STARTCn bit in I2Cn_CR.

After doing any of the actions above, clear all interrupt source bits in I2Cn_ST to ‘0’ to release SCL line. In case of A, move to step 7. In case of B, move to step 9 to handle STOP interrupt. In case of C, move to step 6 after transmitting the data in I2CDR, and if transfer direction bit is ‘1’, go to master receiver section.

9. This is the final step for master transmitter function of I2C, handling STOP interrupt. The STOP bit indicates that data transfer between master and slave is over. To clear I2Cn_ST, write “0xff” to I2Cn_ST. After this, I2C enters idle state.

18.5.2 Master receiver

To operate I2C in master receiver, follow the recommended steps below.

1. Enable I2C by setting I2CnEN bit in I2Cn_CR. This provides main clock to the peripheral.
2. Load SLA+R into the I2Cn_DR, where SLA is address of slave device and R is transfer direction from the viewpoint of the master. For master receiver, R is ‘1’. Note that I2Cn_DR is used for both address and data.
3. Configure baud rate by writing desired value to both I2Cn_SCLR and I2Cn_SCHR for the Low and High period of SCLn line.
4. Configure the I2Cn_SDHR to decide when SDAn changes value from falling edge of SCLn. If SDAn should change in the middle of SCLn LOW period, load half the value of I2Cn_SCLR to the I2Cn_SDHR.
5. Set the STARTCn bit in I2Cn_CR. This transmits a START condition. Also, configure how to handle interrupt and ACK signal. When the STARTCn bit is set, 8-bit data in I2Cn_DR is transmitted out according to the baud-rate.
6. This is ACK signal processing stage for address packet transmitted by master. When 7-bit address and 1-bit transfer direction is transmitted to target slave device, the master can know whether the slave acknowledged or not in the 9th high period of SCLn. If the master gains bus mastership, I2C generates GCALL interrupt regardless of receiving ACK from the slave device. When I2C loses bus mastership during arbitration process, the MLOSTn bit in I2Cn_ST is set, and I2C waits in idle state or can be operated as an addressed slave.

   To operate as a slave when the MLOSTn bit in I2Cn_ST is set, the ACKnEN bit in I2Cn_CR must be set, and the received 7-bit address must equal to the SLAn bits in I2Cn_SAR1/2. In this case, I2C operates as a slave transmitter or a slave receiver (go to appropriate section). In this stage, I2C holds the SCLn LOW. The reason for this is to decide whether I2C should continue serial transfer or stop communication. The following steps continue, assuming that I2C does not lose mastership during the first data transfer.

I2C (Master) can choose one of the following cases according to the reception of ACK signal from slave.

A. Master receives ACK signal from slave, so continues data transfer since slave can prepare and transmit more data to master. Configure ACKnEN bit in I2Cn_CR to decide whether I2C should Acknowledges the next data to be received or not.

B. Master stops data transfer since it receives no ACK signal from slave. In this case, set the STOPCn bit in I2Cn_CR.

C. Master transmits repeated START condition due to lack of ACK signal from slave. In this case, load SLA+R/W into the I2Cn_DR and set STARTCn bit in I2Cn_CR.

After doing any of the actions above, clear all interrupt source bits in I2Cn_ST to ‘0’ to release SCLn line. In case of A, move to step 7. In case of B, move to step 9 to handle STOP interrupt. In case of C, move to step 6 after transmitting the data in I2Cn_DR, and if transfer direction bit is ‘0’, go to master transmitter section.

7. 1-Byte of data is received.

8. This is ACK signal processing stage for data packet transmitted by slave. I2C holds the SCLn LOW. When 1-Byte of data is received completely, I2C generates TENDn interrupt.

   I2C can choose one of the following cases according to the RXACKn flag in I2Cn_ST.

   A. Master continues receiving data from slave. To do this, set ACKnEN bit in I2Cn_CR to acknowledge the next data to be received.

   B. Master wants to terminate data transfer when it receives next data by not generating ACK signal. This can be done by clearing ACKnEN bit in I2Cn_CR.

   C. Since no ACK signal is detected, master terminates data transfer. In this case, set the STOPCn bit in I2Cn_CR.

   D. No ACK signal is detected, and master transmits repeated START condition. In this case, load SLA+R/W into the I2Cn_DR and set the STARTCn bit in I2Cn_CR.

   After doing any of the actions above, clear all interrupt source bits in I2Cn_ST to ‘0’ to release SCLn line. In case of A and B, move to step 7. In case of C, move to step 9 to handle STOP interrupt. In case of D, move to step 6 after transmitting the data in I2Cn_DR, and if transfer direction bit is ‘0’, go to master transmitter section.

9. This is the final step for master receiver function of I2C, handling STOP interrupt. The STOP bit indicates that data transfer between master and slave is over. To clear I2Cn_ST, write “0xff” value to I2Cn_ST. After this, I2C enters idle state.

18.5.3 Slave transmitter

To operate I2C in slave transmitter, follow the recommended steps below.

1. If the operating clock (HCLK) of the system is slower than that of SCLn, load value 0x00 into I2Cn_SDHR to make SDAn change within one system clock period from the falling edge of SCLn. Note that the hold time of SDAn is calculated by SDAH x period of HCLK where SDAH is multiple of number of HCLK coming from I2Cn_SDHR. When the hold time of SDAn is longer than the period of HCLK, I2C (slave) cannot transmit serial data properly.

2. Enable I2C by setting I2CnIEN bit and I2CnEN bit in I2Cn_CR. This provides main clock to the peripheral.

3. When a START condition is detected, I2C receives one byte of data and compares it with SLAn bits in I2Cn_SAR1/2. If the GCALLnEN bit in I2Cn_SAR1/2 is enabled, I2C compares the received data with value 0x00, the general call address.

4. If the received address does not match SLAn bits in I2CnSAR, I2C enters idle state, i.e., waits for another START condition. Otherwise, if the address equals to SLAn bits and the ACKnEN bit is enabled, I2C generates SSELn interrupt and the SCLn line is held LOW. Note that even if the address matches SLAn bits, when the ACKnEN bit is disabled, I2C enters idle state. When SSELn interrupt occurs, load transmit data to I2Cn_DR and clear all interrupt source bits in I2Cn_ST to ‘0’ to release SCLn line.

5. 1-Byte of data is transmitted.

6. In this step, I2C generates TENDn interrupt and holds the SCLn line LOW regardless of receiving ACK signal from master. Slave can select one of the following cases.

   A. No ACK signal is detected and I2C waits STOP or repeated START condition.

   B. ACK signal from master is detected. Load data to transmit into I2Cn_DR.

   After doing any of the actions above, clear all interrupt source bits in I2Cn_ST to ‘0’ to release SCLn line. In case of A, move to step 7 to terminate communication. In case of B, move to step 5. In either case, a repeated START condition can be detected. For that case, move step 4.

7. This is the final step for slave transmitter function of I2C, handling STOP interrupt. The STOPCn bit indicates that data transfer between master and slave is over. To clear I2Cn_ST, write “0xff” to I2Cn_ST. After this, I2C enters idle state.

18.5.4 Slave receiver

To operate I2C in slave receiver, follow the recommended steps below.

1. If the operating clock (HCLK) of the system is slower than that of SCLn, load value 0x00 into I2Cn_SDHR to make SDAn change within one system clock period from the falling edge of SCLn. Note that the hold time of SDAn is calculated by SDAH x period of HCLK where SDAH is multiple of number of HCLK coming from I2Cn_SDHR. When the hold time of SDAn is longer than the period of HCLK, I2C (slave) cannot transmit serial data properly.
2. Enable I2C by setting I2CnIEN bit in I2Cn_CR. This provides main clock to the peripheral.
3. When a START condition is detected, I2C receives one byte of data and compares it with SLA bits in I2CSAR. If the GCALLnEN bit in I2Cn_SAR1/2 is enabled, I2C compares the received data with value 0x00, the general call address.
4. If the received address does not match SLAn bits in I2Cn_SAR1/2, I2C enters idle state i.e., waits for another START condition. Otherwise, if the address match SLAn bits and the ACKnEN bit is enabled, I2C generates SSELn interrupt and the SCLn line is held LOW. Note that even if the address equals to SLA bits, when the ACKnEN bit is disabled, I2C enters idle state. When SSELn interrupt occurs and I2C is ready to receive data, clear all interrupt source bits in I2Cn_ST to ‘0’ to release SCLn line.
5. 1-Byte of data is received.
6. In this step, I2C generates TENDn interrupt and holds the SCLn line LOW regardless of receiving ACK signal from master. Slave can select one of the following cases.

   A. No ACK signal is detected (ACKnEN=0) and I2C waits STOP or repeated START condition.

   B. ACK signal is detected (ACKnEN=1) and I2C can continue to receive data from master.

   After doing any of the actions above, clear all interrupt source bits in I2Cn_ST to ‘0’ to release SCLn line. In case of A, move to step 7 to terminate communication. In case of B, move to step 5. In either case, a repeated START condition can be detected. For that case, move to step 4.
7. This is the final step for slave receiver function of I2C, handling STOP interrupt. The STOPCn bit indicates that data transfer between master and slave is over. To clear I2Cn_ST, write “0xff” to I2Cn_ST. After this, I2C enters idle state.

19 SPI 1 interface

SPI interface enables synchronous serial data transfer between external serial devices. It allows full-duplex communication using 4-wires (MOSIn, MISOn, SCKn, SSn).

It supports master and slave modes, and selects serial clock (SCKn) polarity. In addition, for the data transmission, it selects whether to transfer LSB first or MSB first.

The SPI 1 of the A31L22x series features the followings:

- Master and slave modes supported
- Clock polarity selection
- Up to 16MHz data transmission
- Exchangeable MOSIn and MISOn functions

19.1 SPI 1 block diagram

Figure 95 shows a block diagram of the SPI block.

Figure 95. SPI Block Diagram (n = 1)

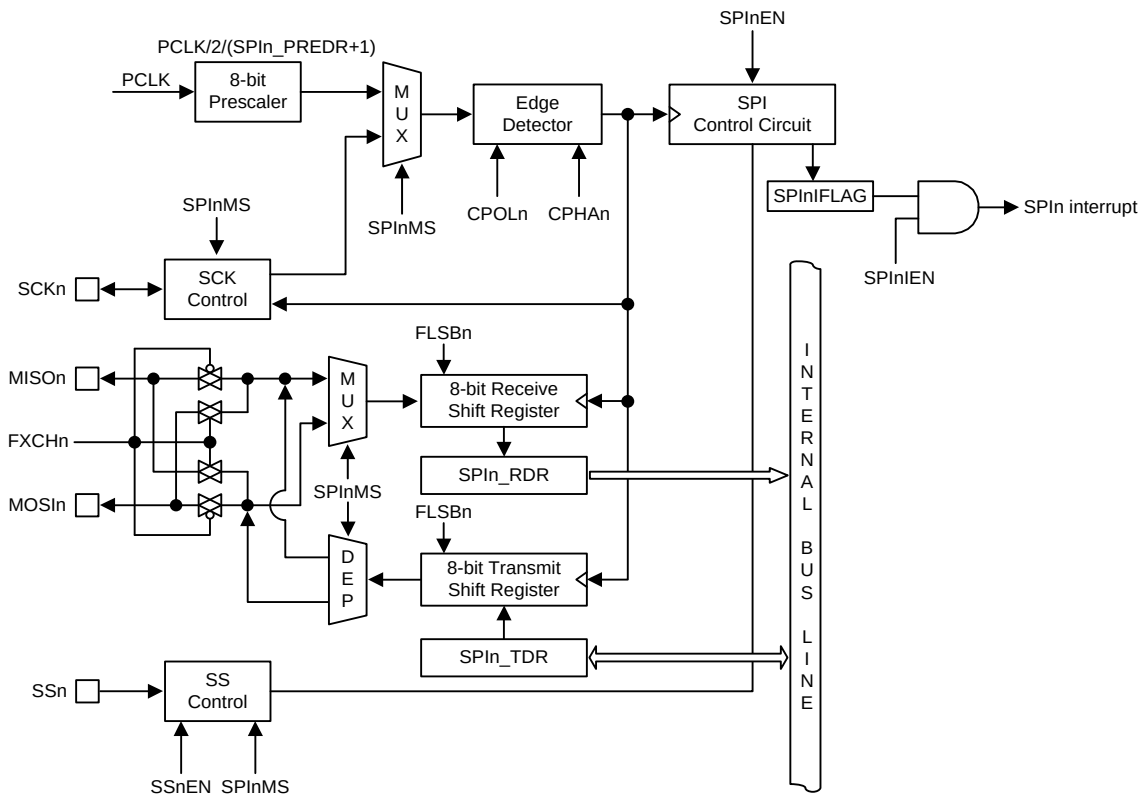

NOTES:

1. The clock frequency of the SCKn should be less than or equal to the PCLK/2.
2. Interrupts of the SPIn occur only when one byte transmission/reception finishes. So, the status (SPInMS and SSnHIGH) bits should be checked by s/w.

19.2 Pin description for SPI 1

Table 79. Pins and External Signals for SPI (n = 1)

Pin name	Type	Description
SSn	I/O	SPIn Slave select input/output
SCKn	I/O	SPIn Serial clock input/output
MOSIn	I/O	SPIn Serial data (Master output, Slave input)
MISOn	I/O	SPIn Serial data (Master input, Slave output)

19.3 Registers

Base address and register map of the SPI 1 are shown in Table 80 and Table 81.

Table 80. Base Address of SPI Interface

Name	Base address	Size	Description
SPI1	0x4000_5880	128	SPI1 Block

Table 81. SPI Register Map (n = 1)

Name	Offset	Type	Description	Reset value
SPIn_CR	0x00	RW	SPIn Control Register	0x00000000
SPIn_SR	0x04	RW	SPIn Status Register	0x00000000
SPIn_RDR	0x08	RO	SPIn Receive Data Register	0x00000000
SPIn_TDR	0x0C	RW	SPIn Transmit Data Register	0x00000000
SPIn_PREDR	0x10	RW	SPIn Prescaler Data Register	0x000003FF

19.3.1 SPIn_CR: SPIn control register

SPI module should be configured properly before running.

SPIn_CR register is 32-bit size and accessible in 32/16/8-bit. (n = 1)

SPI1_CR=0x4000_5880

31 30 29 28 27 26 25 24	23 22 21 20 19 18 17 16	15 14 13 12 11 10 9 8	7	6	5	4	3	2	1	0
Reserved			SPInEN	FLSBn	SPInMS	Reserved	SPInIEN	Reserved	CPOLn	CPHAn
0x000000			0	0	0	0	0	0	0	0
-			RW	RW	RW	-	RW	-	RW	RW

7	SPInEN	SPIn Operation Control. **NOTE**: This bit should be set to "1b" after setting the related registers.
		0 Disable SPIn operation.
		1 Enable SPIn operation.
6	FLSBn	Data Transmission sequence selection.
		0 MSB first.
		1 LSB first.
5	SPInMS	Master/Slave Selection.
		0 Slave mode.
		1 Master mode.
3	SPInIEN	SPIn Interrupt Enable.
		0 Disable SPIn interrupt.
		1 Enable SPIn interrupt.
1	CPOLn	Selects the clock polarity of SCK.
		0 SCK to 0 when idle.
		1 SCK to 1 when idle.
0	CPHAn	The CPOLn and this bit determine if data are sampled on the leading or the trailing edge of SCK.

CPOLn	CPHAn	Leading edge	Trailing edge
0	0	Sample (Rising)	Setup (Falling)
0	1	Setup (Rising)	Sample (Falling)
1	0	Sample (Falling)	Setup (Rising)
1	1	Setup (Falling)	Sample (Rising)

19.3.2 SPIn_SR: SPIn status register

SPIn_SR register is 32-bit size and accessible in 32/16/8-bit. (n = 1)

SPI1_SR=0x4000_5884

31 30 29 28 27 26 25 24	23 22 21 20 19 18 17 16	15 14 13 12 11 10 9 8	7	6	5	4	3	2	1	0
Reserved			SPInIFLAG	Reserved		SSnHIGH	Reserved		FXCHn	SSnEN
0x000000			0	0	0	0	0	0	0	0
-			RW	-	-	RW	-	-	RW	RW

7	SPInIFLAG	SPIn Interrupt Flag.	
		0	No request occurred.
		1	Request occurred. This bit is cleared to ‘0’ when write ‘1’.
4	SSnHIGH	This bit is set when the SSn pin goes high level during the pin is the corresponding function.	
		0	No effect when ‘0’ is written.
		1	The SSn pin has gone from low level to high. This bit is cleared to ‘0’ when write ‘1’.
1	FXCHn	SPIn Pin Function Exchange Control.	
		0	No effect.
		1	Exchange MOSIn and MISOn function.
0	SSnEN	SSn Pin Operation Control.	
		0	Disable SSn pin operation.
		1	Enable SSn pin operation. The corresponding SSn Pin should be configured to the alternative function.

19.3.3 SPIn_RDR: SPIn receive data register

SPIn_RDR register is 32-bit size and accessible in 32/16/8-bit. (n = 1)

SPI1_RDR=0x4000_5888

31 30 29 28 27 26 25 24	23 22 21 20 19 18 17 16	15 14 13 12 11 10 9 8	7 6 5 4 3 2 1 0
Reserved			RDATA
0x000000			0x00
-			RO

7 0	RDATA	SPIn Receive Data.

19.3.4 SPIn_TDR: SPIn transmit data register

SPIn_TDR register is 32-bit size and accessible in 32/16/8-bit. (n = 1)

SPI1_TDR=0x4000_588C

31 30 29 28 27 26 25 24	23 22 21 20 19 18 17 16	15 14 13 12 11 10 9 8	7 6 5 4 3 2 1 0
Reserved			TDATA
0x000000			0x00
-			RW

7 0	TDATA	SPIn Transmit Data. When it is written a byte to this data register, the SPIn will start. **NOTE**: The data to be transmitted should be written after all control registers are set.

19.3.5 SPIn_PREDR: SPIn prescaler data register

SPIn_PREDR register is 32-bit size and accessible in 32/16/8-bit. (n = 1)

SPI1_PREDR=0x4000_5890

31 30 29 28 27 26 25 24	23 22 21 20 19 18 17 16	15 14 13 12 11 10	9 8	7 6 5 4 3 2 1 0
Reserved				PRED
0x000000				0x3FF
-				RW

9 0	PRED	The value in this register is used to generate an SCK clock. SCKn clock: PCLK/2/(PRED[9:0] +1). The SCKn clock must be less than or equal to 16MHz. The range is 0x00 to 0x3FF.

19.4 Functional description

When SPIn block is enabled (SPInEN = ’1’), the slave select (SSn) pin becomes active LOW input in slave mode operation if SSnEN bit is set to ‘1’. The SSn function is not automatically controlled in master mode operation even if SSnEN bit is set to ‘1’. (n = 1)

19.4.1 SPI clock formats and timing

To accommodate a wide variety of synchronous serial peripherals from different manufacturers, the SPIn has a clock polarity bit (CPOLn) and a clock phase control bit (CPHAn) to select one of four clock formats for data transfers. CPOLn selectively inserts an inverter in series with the clock. CPHAn chooses between two different clock phase relationships between the clock and data.

Table 82 shows the four combinations of CPOLn and CPHAn for SPIn. (n = 1)

Table 82. CPOL Functionality (n = 1)

SPIn Mode	CPOLn	CPHAn	Leading Edge	Trailing Edge
0	0	0	Sample (Rising)	Setup (Falling)
1	0	1	Setup (Rising)	Sample (Falling)
2	1	0	Sample (Falling)	Setup (Rising)
3	1	1	Setup (Falling)	Sample (Rising)

Figure 96. SPIn Clock Formats when CPHAn=0 (n = 1)

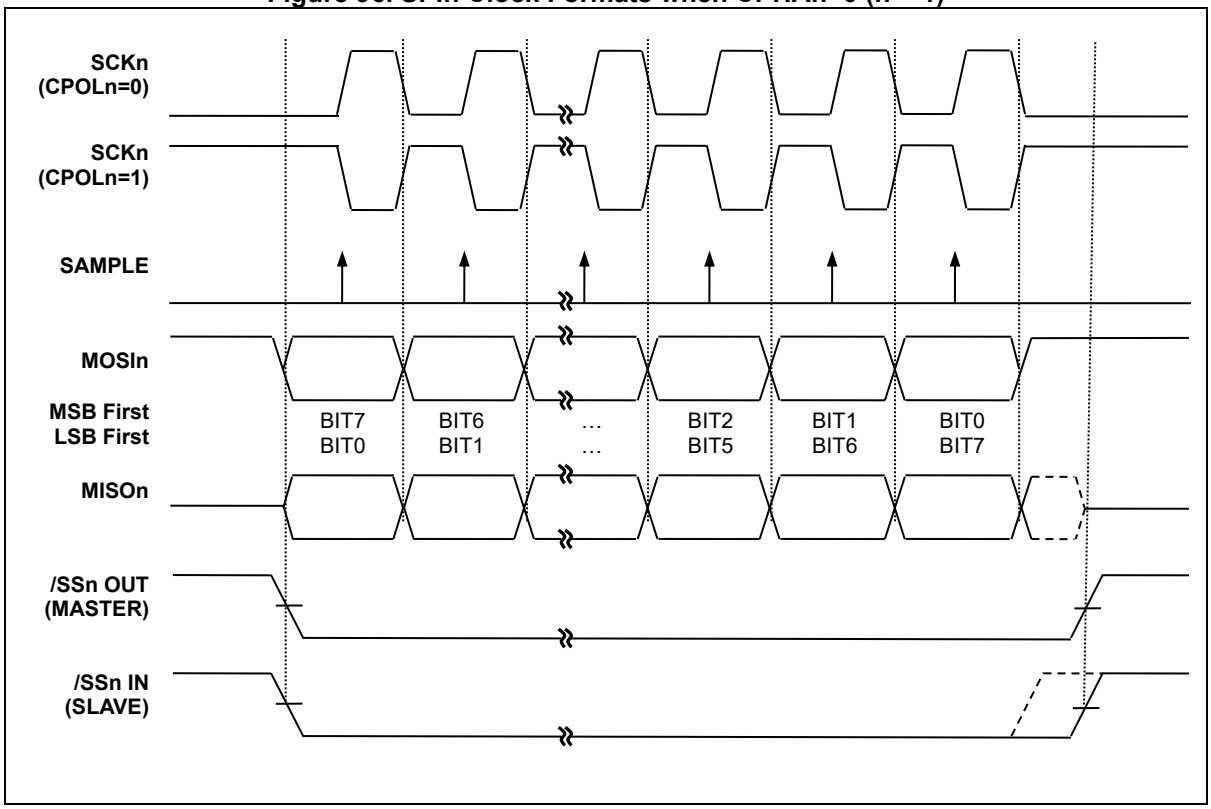

When CPHAn=0, the slave begins to drive its MISOn output with the first data bit value when SSn goes to active low. The first SCKn edge causes both the master and the slave to sample the data bit value on their MISOn and MOSIn inputs, respectively. At the second SCKn edge, the SPIn shifts the second data bit value out to the MOSIn and MISOn outputs of the master and slave, respectively. (n = 1)

Figure 97. SPIn Clock Formats when CPHAn=1 (n = 1)

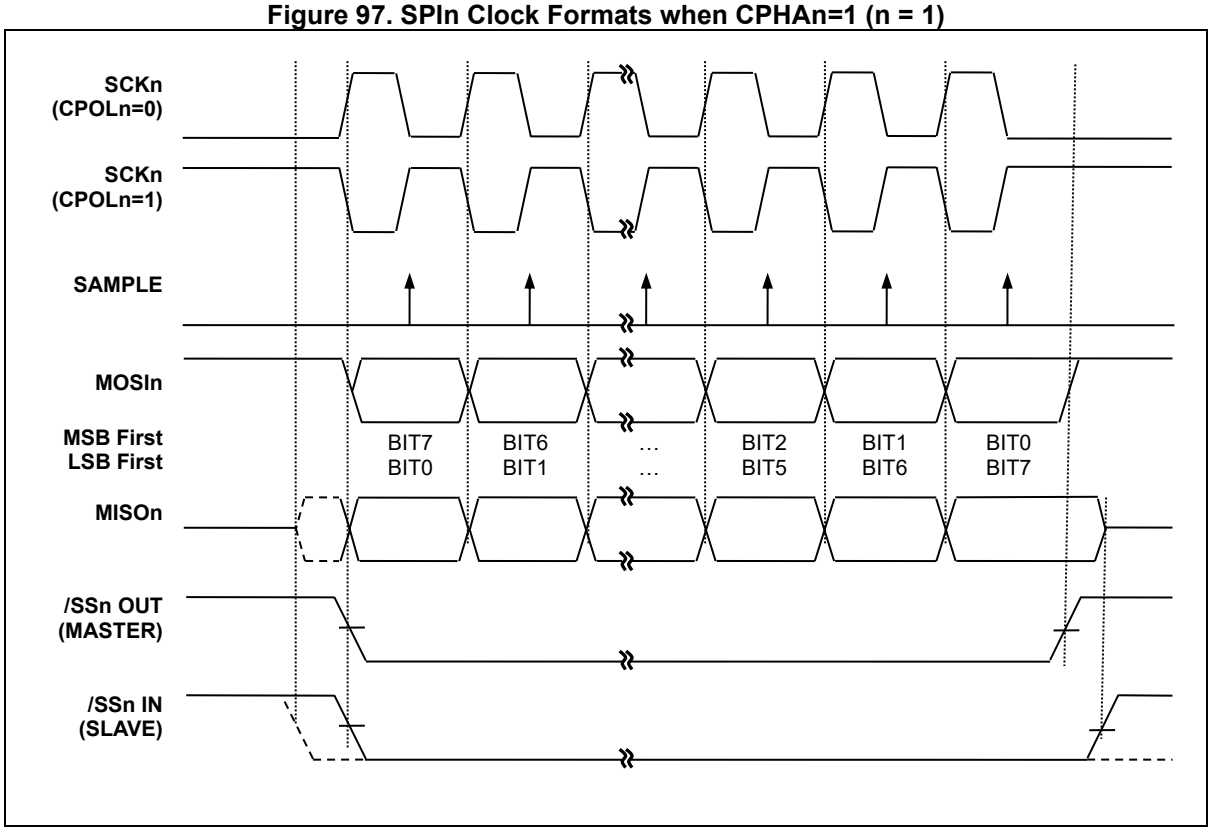

When CPHAn=1, the slave begins to drive its MISOn output when SSn goes active low, but the data is not defined until the first SCKn edge.

The first SCKn edge shifts the first bit of data from the shifter onto the MOSIn output of the master and the MISOn output of the slave. The next SCKn edge causes both the master and slave to sample the data bit value on their MISOn and MOSIn inputs, respectively. At the third SCKn edge, the USART shifts the second data bit value out to the MOSIn and MISOn output of the master and slave respectively.

When CPHAn=1, the slave’s SSn input is not required to go to its inactive high level between transfers.

20 Cyclic Redundancy Check (CRC) and checksum

Cyclic Redundancy Check (CRC) generator is used to obtain 8/16/32-bit CRC code of Flash ROM and any data stream.

Among other applications, CRC-based techniques are used to verify data transmission or storage integrity. In the scope of functional safety standards, they offer means of verifying Flash memory's integrity.

The CRC generator helps computing the signature of the software during runtime, comparing with a reference signature.

A CRC generator of the A31L22x series has following features:

- Auto CRC and User CRC Mode
- Supports CRC-CCITT ($G_1(x) = x^{16} + x^{12} + x^5 + 1$)
- Supports CRC-16 ($G_2(x) = x^{16} + x^{15} + x^2 + 1$)
- Supports CRC-8 ($G_3(x) = x^8 + x^2 + x + 1$)
- Supports CRC-32 ($G_4(x) = x^{32} + x^{26} + x^{23} + x^{22} + x^{16} + x^{12} + x^{11} + x^{10} + x^8 + x^7 + x^5 + x^4 + x^2 + x + 1$)
- CRC and Checksum mode
- CRC/Checksum Start Address Auto Increment (User mode only)

20.1 CRC and checksum block diagram

Figure 98 shows a block diagram of the CRC and checksum interface block.

Figure 98. CRC and Checksum Block Diagram

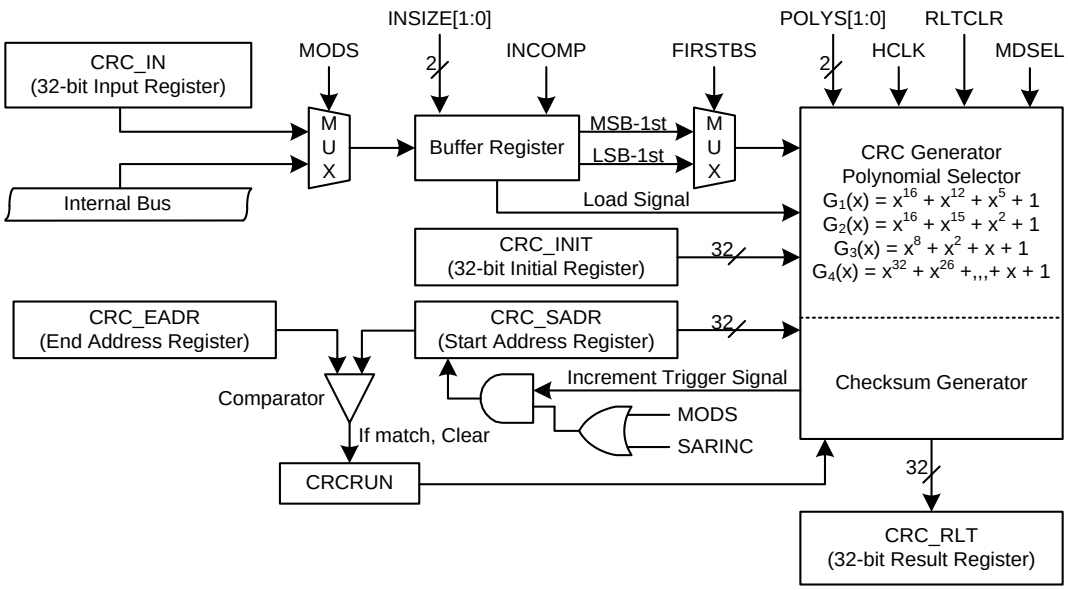

NOTES:

1. The operation is finished after calculating from the address specified by the CRC_SADR to the address specified by the CRC_EADR, in auto mode or when SARINC=1.
2. The CRC_SADR and CRC_EADR have the same value after finishing the operation.
3. The end address in the CRC_EADR must be greater than the start address in CRC_SADR.
4. The end address must be at least 0x7C from the start address in “Auto mode”.
5. The CRC_SADR/CRC_EADR in “Auto mode” should have any value in Flash memory area (0x10000000 to 0x10007FFF).
6. The CPU will be held at “Auto mode” if the CPU is in the Flash memory, and global interrupts should be disabled by software.
7. Users must set the HCLK frequency to be less than or equal to 20MHz in “Auto mode” by configuring the MODS bit of the CRC_CR register.
8. In Auto mode, the CRC_CR can’t be written and the CRC_RLT can’t be read.

20.2 Registers

Base address and register map of the CRC and checksum block are shown in Table 83 and Table 84.

Table 83. Base Address of CRC

Name	Base address
CRC	0x3000_1000

Table 84. CRC Register Map

Name	Offset	Type	Description	Reset value
CRC_CR	0x0000	RW	CRC/Checksum Control Register	0x00000000
CRC_IN	0x0004	RW	CRC/Checksum Input Data Register	0x00000000
CRC_RLT	0x0008	RO	CRC/Checksum Result Data Register	0xFFFFFFFF
CRC_INIT	0x000C	RW	CRC/Checksum Initial Data Register	0x00000000
CRC_SADR	0x0010	RW	CRC/Checksum Start Address Register	0x10000000
CRC_EADR	0x0014	RW	CRC/Checksum End Address Register	0x10007FFC

20.2.1 CRC_CR: CRC control register

CRC_CR register is 32-bit size and accessible in 32/16/8-bit.

CRC_CR=0x3000_1000

31	30	29	28	27	26	25	24	23	22	21	20	19	18	17	16	15	14	13	12	11	10	9	8	7	6	5	4	3	2	1	0
Reserved																INSIZE		Reserved			INCOMP	Reserved		MODS	RLTCLR	MDSEL	POLYS		SARINC	FIRSTBS	CRCRUN
0x0000																0	0	0	0	0	0	0	0	0	0	0	0	0	0	0	0
-																RW	RW	-	-	-	RW	-	-	RW	RW	RW	RW	RW	RW	RW	RW

15 14	INSIZE	Input Data Size Selection.	
		00	32-bit is the input data size.
		01	16-bit is the input data size.
		10	8-bit is the input data size.
		11	Reserved.
10	INCOMP	Input Data Complement.	
		0	No effect
		1	1's complement of input data. Ex) If 0x3AB7, the complement data are 0xC548.
7	MODS	User/Auto Mode Selection.	
		0	User mode. (Calculate every data written to the CRC_IN register)
		1	Auto mode. (Calculate till CRC_SADR == CRC_EADR)
6	RLTCLR	CRC/Checksum Result Data Register (CRC_RLT) Initialization.	
		0	No effect.
		1	Initialize the CRC_RLT register with the value of CRC_INIT (This bit is automatically cleared to '0' after operation)
5	MDSEL	CRC/Checksum Selection.	
		0	Select CRC.
		1	Select checksum.
4 3	POLYS	Polynomial Selection. (CRC only)	
		00	CRC-CCITT ($G_1(x) = x^{16} + x^{12} + x^5 + 1$)
		01	CRC-16 ($G_2(x) = x^{16} + x^{15} + x^2 + 1$)
		10	CRC-8 ($G_3(x) = x^8 + x^2 + x + 1$)
		11	CRC-32 ($G_4(x) = x^{32} + x^{26} + x^{23} + x^{22} + x^{16} + x^{12} + x^{11} + x^{10} + x^8 + x^7 + x^5 + x^4 + x^2 + x + 1$)
2	SARINC	CRC/Checksum Start Address Auto Increment Control. (User mode only)	
		0	No effect.
		1	The CRC/Checksum start address register is incremented as the selected input size every writing to the CRC_IN register.
1	FIRSTBS	First Shifted-in Selection. (CRC only)	
		0	MSB-1st.
		1	LSB-1st.
0	CRCRUN	CRC/Checksum Start Control and Busy.	
		0	Not busy. The CRC operation can be finished by writing '0' to this bit while running.
		1	Start CRC operation. This bit is automatically cleared to '0' when the value of CRC_SADR register reaches the value of CRC_EADR register.
		NOTE:	The 5 "NOP instruction" should be executed immediately after this bit is set to '1'.

NOTES:

1. The CRC_RLT register and the CRC/Checksum block should be initialized by writing '1' to the RLTCLR bit before a new CRC/Checksum calculation.
2. The CRCRUN bit should be set to '1' last time after setting appropriate values to the registers.
3. On the user mode, it will be calculated every writing data to the CRC_IN register during CRCRUN==1.

4. On the user mode with SARINC==0, the block is finished by writing ‘0’ to the CRCRUN bit.
5. It is prohibited writing any data to the CRC_IN register during CRCRUN==0.
6. The checksum is calculated by a selected input data size unit.
   - Ex1) On 8-bit size, CRC_RLT = 8-bit byte + 8-bit byte + 8-bit byte + -----.
   - Ex2) On 16-bit size, CRC_RLT = 16-bit word + 16-bit word + 16-bit word + -----.
   - Ex3) On 32-bit size, CRC_RLT = 32-bit word + 32-bit word + 32-bit word + -----.
7. The 5 “NOP Instruction” should follow immediately after CRCRUN bit is set to ‘1’.

20.2.2 CRC_IN: CRC input data register

CRC_IN register is 32-bit size.

CRC_IN=0x3000_1004

31	30	29	28	27	26	25	24	23	22	21	20	19	18	17	16	15	14	13	12	11	10	9	8	7	6	5	4	3	2	1	0
INDATA																															
0x00000000																															
RW																															

31 0	INDATA	CRC Input Data.

NOTE: The CRC_IN register can be written by 1-byte (8-bits), half-word (16-bits), and 1-word (32-bits).

20.2.3 CRC_RLT: CRC result data register

CRC_RLT register is 32-bit size and accessible in 32/16/8-bit.

CRC_RLT=0x3000_1008

31	30	29	28	27	26	25	24	23	22	21	20	19	18	17	16	15	14	13	12	11	10	9	8	7	6	5	4	3	2	1	0
RLTDATA																															
0xFFFFFFFF																															
RO																															

31 0	RLTDATA	CRC Result Data.

20.2.4 CRC_INIT: CRC initial data register

CRC_INIT register is 32-bit size and accessible in 32/16/8-bit.

CRC_INIT=0x3000_100C

31	30	29	28	27	26	25	24	23	22	21	20	19	18	17	16	15	14	13	12	11	10	9	8	7	6	5	4	3	2	1	0
INIDATA																															
0x00000000																															
RW																															

31 0	INIDATA	CRC Initial Data.

20.2.5 CRC_SADR: CRC start address register

CRC_SADR register is 32-bit size and accessible in 32/16/8-bit.

CRC_SADR=0x3000_1010

31	30	29	28	27	26	25	24	23	22	21	20	19	18	17	16	15	14	13	12	11	10	9	8	7	6	5	4	3	2	1	0
SADR																															
0x10000000																															
RW																															

31 0	SADR	CRC Start Address

NOTES:

1. The LSB-1bit of the start address should be “0b” on the 16-bits input data size.
2. The LSB-2bits of the start address should be “00b” on the 32-bits input data size.

20.2.6 CRC_EADR: CRC end address register

CRC_EADR register is 32-bit size and accessible in 32/16/8-bit.

CRC_EADR=0x3000_1014

31	30	29	28	27	26	25	24	23	22	21	20	19	18	17	16	15	14	13	12	11	10	9	8	7	6	5	4	3	2	1	0
EADR																															
0x10007FFC																															
RW																															

31 0	EADR	CRC End Address.

NOTES:

1. The LSB-1bit of the end address should be “0b” on the 16-bits input data size.
2. The LSB-2bits of the end address should be “00b” on the 32-bits input data size.

20.3 Functional description

20.3.1 CRC polynomial structure

Figure 99. CRC Polynomial Structure

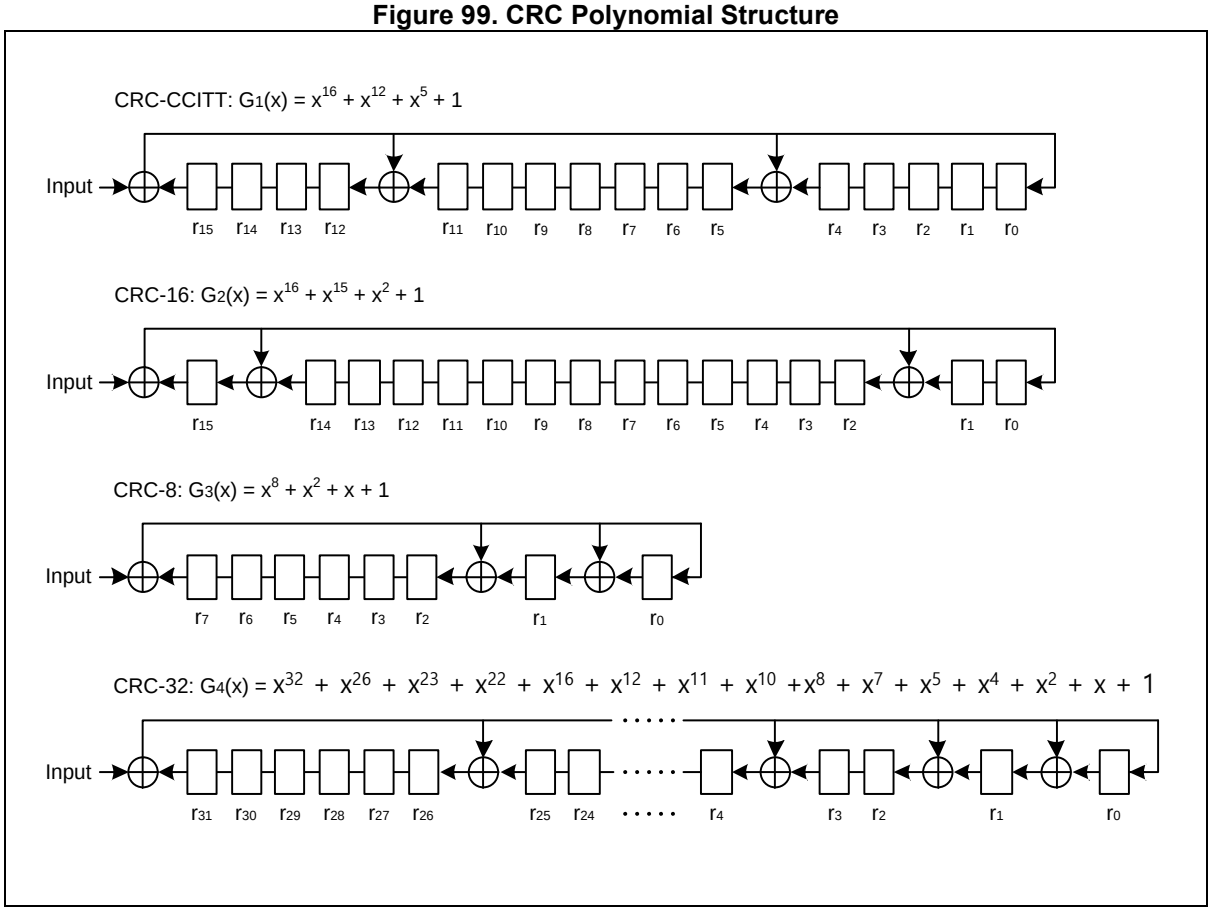

20.3.2 The CRC operation procedure in auto CRC/checksum mode

1. CRC/Checksum Clock Enable
2. Set CRC start address register. (CRC_SADR)
3. Set CRC end address register. (CRC_EADR)
4. Set CRC initial data register. (CRC_INIT)
5. Global interrupt Disable.
6. Select CRC(HCLK) Clock. (HCLK should be less than or equal to 20MHz during CRC/Checksum auto mode)
7. Select Auto CRC/Checksum Mode and CRC.
8. CRC operation starts. (CRCRUN = 1)
9. Read the CRC result.
10. Global interrupt Enable.

20.3.3 The CRC operation procedure in user CRC/checksum mode

1. CRC/Checksum Clock Enable
2. Set CRC start address register. (CRC_SADR)
3. Set CRC end address register. (CRC_EADR)
4. Set CRC initial data register. (CRC_INIT)
5. Select User CRC/Checksum Mode and CRC
6. CRC operation starts. (CRCRUN = 1)
7. Input CRC Data at CRC_IN.
8. Check CRC is finished on Start Address Auto Increment or Compare Start address and End address in order to check CRC end point.
9. Repeat 8 and 9 until CRC end point.
10. CRC Stop and read CRC result.

21 Temperature Sensor (TS)

The Temperature Sensor (TS) is a ring-oscillator type and can be used to measure the junction temperature of the device. The nominal frequency at 30℃ is about 1.1MHz and it varies from 0.7MHz to 1.45MHz as the temperature changes from -20℃ to +105℃.

The TS of the A31L22x series has following features:

- -20℃ to +105℃ wide range of operating temperature
- A down counter at 16-bit intervals to count the frequency of the TS
- A 24-bit data register to store the count value of the temperature sensor frequency

21.1 TS block diagram

Figure 100 shows a block diagram of the temperature sensor block.

Figure 100. TS Block Diagram

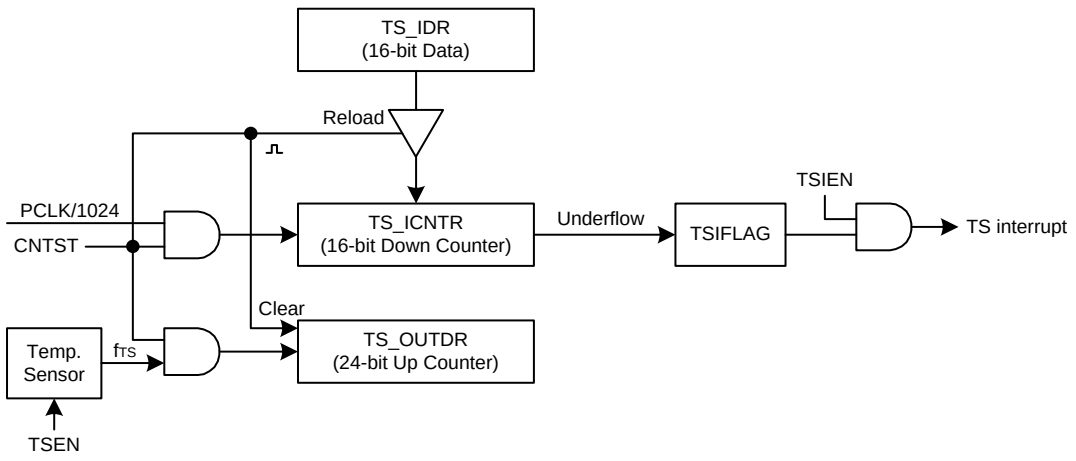

NOTE: The CNTST bit will be cleared to “0b” after the underflow of TS_ICNTR.

21.2 Registers

Base address and register map of the temperature sensor block are shown in Table 85 and Table 86.

Table 85. Base Address of TS

Name	Base address
TS	0x4000_5F80

Table 86. TS Register Map

Name	Offset	Type	Description	Reset value
TS_CR	0x0000	RW	Temperature Sensor Control Register	0x00000000
TS_IDR	0x0004	RW	Temperature Sensor Interval Data Register	0x0000FFFF
TS_ICNTR	0x0008	RO	Temperature Sensor Interval Counter Register	0x0000FFFF
TS_OUTDR	0x000C	RO	Temperature Sensor Output Data Register	0x00000000

21.2.1 TS_CR: Temperature Sensor control register

TS_CR register is 32-bit size and accessible in 32/16/8-bit.

TS_CR=0x4000_5F80

31 30 29 28 27 26 25 24	23 22 21 20 19 18 17 16	15 14 13 12 11 10 9 8	7	6	5	4	3	2	1	0
Reserved			TSIEN	Reserved		TSIFLAG	Reserved		CNTST	TSEN
0x000000			0	00		0	00		0	0
-			RW	-	-	RW	-	-	RW	RW

7	TSIEN	Temperature Sensor Interrupt Enable
		0 Disable interrupt
		1 Enable interrupt
4	TSIFLAG	Temperature Sensor Interrupt flag
		0 No request occurred
		1 Request occurred. This bit is cleared to ‘0’ when write ‘1’.
1	CNTST	Counting Start
		0 Stop counting
		1 Counting start after “reload data to TS_ICNTR and clear TS_OUTDR”
		NOTE: This bit will be cleared to “0b” after the underflow of TS_ICNTR register.
0	TSEN	Temperature Sensor Enable
		0 Disable temperature sensor
		1 Enable temperature sensor

21.2.2 TS_IDR: Temperature Sensor interval data register

TS_IDR register is 32-bit size and accessible in 32/16/8-bit.

TS_IDR=0x4000_5F84

31 30 29 28 27 26 25 24	23 22 21 20 19 18 17 16	15 14 13 12 11 10 9 8	7 6 5 4 3 2 1 0
Reserved		IDATA	
0x0000		0xFFFF	
-		RW	

15 0	IDATA	Temperature Sensor Interval Data bits.

21.2.3 TS_ICNTR: Temperature Sensor interval counter register

TS_ICNTR register is 32-bit size and accessible in 32/16/8-bit.

TS_ICNTR=0x4000_5F88

31 30 29 28 27 26 25 24	23 22 21 20 19 18 17 16	15 14 13 12 11 10 9 8	7 6 5 4 3 2 1 0
Reserved		ICNT	
0x0000		0xFFFF	
-		RO	

15 0	ICNT	Temperature Sensor Interval Counter bits.

21.2.4 TS_OUTDR: Temperature Sensor output data register

TS_OUTDR register is 32-bit size and accessible in 32/16/8-bit.

TS_OUTDR=0x4000_5F8C

31 30 29 28 27 26 25 24	23 22 21 20 19 18 17 16	15 14 13 12 11 10 9 8	7 6 5 4 3 2 1 0
Reserved	**OUTDATA**		
0x0000 **-**	**0x000000** **RO**		

23 0	OUTDATA	Temperature Sensor Output Data bits.

21.3 Functional description

21.3.1 Ring-oscillator of Temperature Sensor

The ring-oscillator of the TS needs a maximum stabilization time of about 500usec. Its frequency ranges from about 0.7MHz to 1.45MHz depending on temperature. The frequency variation is about 3.2kHz per Celsius degree and its frequency is directly proportional to temperature.

21.3.2 Frequency counting

The frequency of the TS can be measured indirectly by using the system clock. The TS block provides the 16-bit interval data and 24-bit output data registers to count the number of temperature sensor clocks during a specific period.

The 16-bit interval data register, TS_IDR, sets the measurement period.

Figure 101 shows temperature sensor timing diagram.

Figure 101. Temperature Sensor Timing Diagram

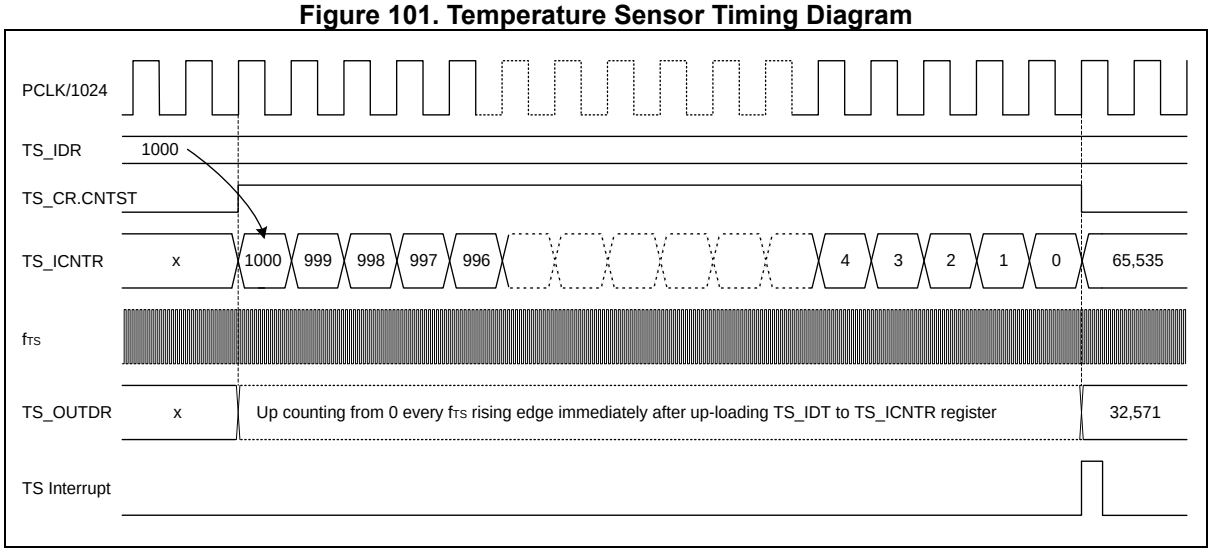

21.3.3 Temperature calculation

The Configure Option Page 0 provides the frequency values of the TS measured by the manufacturer at 30[℃], 85[℃] and 105[℃], respectively.

Table 87 shows the corresponding registers in the Configure Option Page 0.

Table 87. TS Output Frequency Registers in Configure Option Page 0

Name	Address	Type	Description
TS_FREQ_T30	0x1FFFF048	RO	Temperature Sensor Output Frequency acquired at 30[℃] [Hz]
TS_FREQ_T85	0x1FFFF04C	RO	Temperature Sensor Output Frequency acquired at 85[℃] [Hz] (Commercial grade)
TS_FREQ_T105	0x1FFFF06C	RO	Temperature Sensor Output Frequency acquired at 105[℃] [Hz] (Industrial grade)

The temperature can be calculated using the formula below:

$$Temperature = \frac{F(T) - F(30)}{\Delta F} + 30\ [℃]$$

Where,

$$\Delta F = \frac{F(T2) - F(T1)}{T2 - T1}$$

T1 = 30℃, T2 = 85℃(Commercial grade) or 105℃(Industrial grade)

F(T1) [kHz] is the temperature sensor output frequency acquired at 30℃

F(T2) [kHz] is the temperature sensor output frequency acquired at 85℃(Commercial grade) or 105℃(Industrial grade)

F(T) [kHz] is the temperature sensor output frequency acquired at an arbitrary temperature.

Example

- TS_FREQ_T30 of Configure Option Page 0 = 1,051,000 (1,051 kHz)
- TS_FREQ_T105 of Configure Option Page 0 = 1,298,000 (1,298 kHz)
- If the acquired frequency at arbitrary temperature is about 1,159,580 (1,159 kHz)
- ΔF = (1,298 – 1051)/(105 – 30) = 247/75 = 3.3 [kHz]
- Measured temperature = (1,159.580 – 1051)/3.3 + 30 = +32.9 +30 ≈ +62.9 [℃]
- Therefore, the result is about +62.9℃.

22 Electrical characteristics

Unless otherwise specified, test conditions for DC characteristics are as shown in the followings:

- T_A = - 40 °C to +85°C(Commercial grade) or T_A = - 40 °C to + 105°C(Industrial grade)
- VDD = 1.71V to 3.6V

NOTE: Refer to **Figure 122. A31L22x Series Numbering Nomenclature** for device part number by Commercial and Industrial grade.

22.1 Absolute maximum ratings

Absolute maximum ratings are limiting values of operating and environmental conditions, which should not be exceeded under the worst possible conditions.

Table 88. Absolute Maximum Ratings

Parameter	Symbol	Ratings	Unit	Remark
Supply voltage	VDD	-0.3 to +4.0	V	–
Normal pin	V_I	-0.3 to VDD +0.3	V	Voltage on any pin with respect to VSS
	V_O	-0.3 to VDD +0.3	V	
	I_{OH}	-15	mA	Maximum current output sourced by (I_{OH} per I/O pin)
	ΣI_{OH}	-60	mA	Maximum current (ΣI_{OH})
	I_{OL}	20	mA	Maximum current sunk by (I_{OL} per I/O pin)
	ΣI_{OL}	160	mA	Maximum current (ΣI_{OL})
5V tolerant pin	VI	-0.3 to +6.0	V	Voltage on any pin with respect to VSS
Total power dissipation	P_T	600	mW	–
Storage temperature	T_{STG}	-65 to +150	°C	–

22.2 Recommended operating conditions

Table 89. Recommended Operating Conditions

Parameter	Symbol	Conditions			Min	Max	Units
Operating voltage	VDD	fx = 32 to 38kHz	Sub clock		1.71	3.6	V
		fx = 2.0 to 4.2MHz	Main clock	Ceramic	1.8	3.6	
		fx = 2.0 to 16MHz		Crystal	2.7	3.6	
		fx = 2.0 to 32MHz	External clock		3.0	3.6	
		fx = 40kHz	Internal RC		1.71	3.6	
		fx = 2.5 to 32MHz			1.71	3.6	
Input voltage	V_{IN}	Normal Pin			-0.3	VDD+0.3	V
		5V tolerance Pins, PD[4:3]	2.0V ≤ VDD ≤ 3.6V		-0.3	5.5	
			1.71V ≤ VDD < 2.0V		-0.3	5.0	
Operating temperature	T_{OPR}	VDD = 1.71 to 3.6V (Commercial grade)			-40	85	°C
		VDD = 1.71 to 3.6V (Industrial grade)			-40	105	

22.3 ADC characteristics

Table 90. ADC Characteristics

(TA = 25℃)

Parameter	Symbol	Conditions		Min	Typ	Max	Units
Resolution	–	–		–	12	–	bit
Integral non-linearity	INL	VDD=1.71V – 3.6V		–	–	±6	LSB
Differential non-linearity	DNL			–	±1	±2	
Zero offset error	ZOE			–	–	±5	
Full scale error	FSE			–	–	±5	
Conversion time	t_{CONV}	VDD=1.71V – 3.6V		2	–	–	µs
Analog input voltage	V_{AN}	–		VSS	–	VDD	V
ADC stabilization time	t_{STAB}	–		–	–	16	$1/f_{ADC}$
Band gap reference buffer voltage	V_{ADCBUF}	Conversion time: 8us		890	940	990	mV
ADC input leakage current	I_{AN}	VDD=3.0V		–	–	2	µA
ADC current	I_{ADC}	Enable	VDD=3.0V, f_{ADC}=8MHz	–	400	800	µA
		Disable		–	–	10	nA

NOTES:

1. Zero offset error is a difference between 0x000 and the converted output for zero input voltage (VSS).
2. Full scale error is a difference between 0xFFF and the converted output for top input voltage (VDD).

22.4 Power-on Reset characteristics

Table 91. Power-on Reset Characteristics

Parameter	Symbol	Conditions	Min	Typ	Max	Units
Reset release level	V_{POR}	–	–	1.2	–	V
Hysteresis	△V	–	–	0.1	–	V
VDD voltage rising time	t_R	0.2V to 2.0V	0.05	–	100	V/ms
POR current	I_{POR}	–	–	21	40	nA

22.5 Comparator characteristics

Table 92. Comparator Characteristics

(TA = 25℃)

Parameter	Symbol	Conditions		Min	Typ	Max	Units
Input offset voltage	VOF	VDD=3.0V, VIN=1/2VDD		–	±4	±20	mV
Operating voltage	VDD	All comparator pins		1.71	–	3.6	V
Startup time	t_{START}	Fast speed		–	15	20	µs
		Slow speed		–	20	25	
Propagation delay	t_{DELAY}	1.71V ≤ VDD ≤ 2.7V	Fast Speed	–	1.2	4	µs
		2.7V ≤ VDD ≤ 3.6V		–	0.8	2	
		1.71V ≤ VDD ≤ 2.7V	Slow Speed	–	2.5	6	
		2.7V ≤ VDD ≤ 3.6V		–	1.8	3.5	
Hysteresis	△V+	VDD=3.0V, VIN- = 1/2VDD, HYSnEN=1		5	10	20	mV
	△V-			-20	-10	-5	
Minimum input level	V_{INMIN}	HYSnEN=1		50	–	–	mVp-p
Reference resistors	R_{REF}	VDD=3.0V		21	30	39	kΩ
Comparator current	ICMP	Enable, fast speed	VDD=3.0V	–	3.5	5	µA
		Enable, slow speed		–	1.0	2	
		Disable		–	–	0.02	

22.6 Temperature Sensor characteristics

Table 93. Temperature Sensor Characteristics

Parameter	Symbol	Conditions		Min	Typ	Max	Units
Temp. linearity	T_{LIN}	Down to -20℃		–	±4	–	℃
Frequency variation	△F	(F(T2) – F(T1)) ÷ (T2 – T1)		1.8	3.2	5.7	kHz/℃
Frequency deviation	–	△F ÷ F(30)		0.25	0.35	0.45	%
Sensor current	I_{TS}	Enable	VDD = 3.0V	–	10	20	uA
		Disable		–	–	10	nA
Startup time	t_{START}	–		–	–	500	µs

NOTES:

1. Temperature = {(F(T) – F(30)) ÷ △F} + 30 [℃], Where: T1 = 30℃, T2 = 85℃(Commercial grade) or 105℃(Industrial grade)
2. F(T1) [kHz] is the temperature sensor output frequency acquired at 30℃.
3. F(T2) [kHz] is the temperature sensor output frequency acquired at 85℃(Commercial grade) or 105℃(Industrial grade).
4. F(T) [kHz] is the temperature sensor output frequency acquired at an arbitrary temperature.

22.7 Low Voltage Reset/Indicator characteristics

Table 94. Low Voltage Reset/Indicator Characteristics

(TA = 25℃)

Parameter	Symbol	Conditions		Min	Typ	Max	Units
Detection level	V_{LVR} V_{LVI}	• LVR: All levels, • LVI: Other levels except 1.50V, • 1.50V level: Rising edge voltage, • Other levels: Falling edge voltage		–	1.50	1.70	V
				1.72	1.87	2.02	
				1.87	2.02	2.17	
				2.02	2.17	2.32	
				2.17	2.32	2.47	
				2.27	2.47	2.67	
				2.44	2.64	2.84	
				2.58	2.78	2.98	
Hysteresis	△V	–		–	40	150	mV
Minimum pulse width	t_{LVRW} t_{LVIW}	–		100	–	–	µs
LVR/LVI current	$I_{LVR/LVI}$	Enable, one of two	VDD = 3V	–	200	400	nA
		Enable, both		–	250	500	
		Disable		–	–	10	

22.8 High frequency internal RC oscillator characteristics

Table 95. High Frequency Internal RC Oscillator Characteristics

Parameter	Symbol	Conditions	Min	Typ	Max	Units
Frequency	f_{HIRC}	VDD = 1.71V to 3.6V	–	32	–	MHz
Accuracy	–	T_A = -40 ˚C to +85 ˚C (commercial grade)	–	–	±2.0	%
		T_A = -40 ˚C to +105 ˚C (industrial grade)	–	–	±3.0	
Clock duty ratio	T_{OD}	–	40	50	60	%
Stabilization time	t_{HFS}	–	–	–	2	µs
IRC current	I_{HIRC}	Enable	–	300	450	µA
		Disable	–	–	10	nA

22.9 Internal Watchdog Timer RC oscillator characteristics

Table 96. Internal Watchdog Timer RC Oscillator Characteristics

Parameter	Symbol	Conditions	Min	Typ	Max	Units
Frequency	f_{WDTRC}	–	34	40	46	kHz
Stabilization time	t_{WDTS}	–	–	–	100	µs
WDTRC current	I_{WDTRC}	Enable	–	450	650	nA
		Disable	–	–	10	

22.10 Timer 60 RC oscillator characteristics

Table 97. Timer 60 RC Oscillator Characteristics

Parameter	Symbol	Conditions	Min	Typ	Max	Units
Frequency	f_{T60RC}	–	50	100	200	Hz
Stabilization time	t_{T60S}	–	–	–	100	µs
T60 current	I_{T60RC}	Enable	–	200	350	nA
		Disable	–	–	10	

22.11 DC electrical characteristics

Table 98. DC Electrical Characteristics

Parameter	Symbol	Conditions	Min	Typ	Max	Units
Input High Voltage	V_{IH}	All input pins, nRESET	0.8VDD	–	VDD	V
Input Low Voltage	V_{IL}	All input pins, nRESET	–	–	0.2VDD	V
Input hysteresis	△V	All input pins, nRESET, VDD=3V	100	200	–	mV
Output High Voltage	V_{OH}	VDD=3V, I_{OH} = – 10mA, T_A=25˚C	VDD-1.0	–	–	V
Output Low Voltage	V_{OL}	VDD=3V, I_{OL1} = 10mA, T_A=25˚C	–	–	1.0	V
Input high leakage current	I_{IH}	All Input ports	–	–	1	µA
Input low leakage current	I_{IL}	All Input ports	– 1	–	–	µA
Pull-up resistor	R_{PU}	V_I=0V, T_A=25˚C, VDD=3V All Input ports	25	50	100	kΩ
		V_I=0V, T_A=25˚C, VDD=3V RESETB	150	250	400	
Pull-down resistor	R_{PD}	V_I=VDD, T_A=25˚C, VDD=3V All Input ports	25	50	100	kΩ
OSC feedback resistor	R_{X1}	XIN=VDD, XOUT=VSS, T_A=25˚C, VDD=3V	0.6	1.2	2.0	MΩ
	R_{X2}	T_A=25˚C, VDD=3V	4.0	7.0	14.0	MΩ

22.12 Supply current characteristics

Table 99. Supply Current Characteristics

Parameter	Symbol	Conditions			Typ	Max	Units
Supply current	I_{DD1} (main run)	f_{HIRC} = 32MHz		VDD=3V, Code executed from Flash	2.5	3.5	mA
		f_{HIRC} = 16MHz			1.5	2.1	
		f_{XIN} = 16MHz			1.4	2.0	
		f_{HIRC} = 32MHz		VDD=3V, Code executed from RAM, Flash power off	2.3	3.2	mA
		f_{HIRC} = 16MHz			1.6	2.2	
		f_{XIN} = 16MHz			1.5	2.1	
	I_{DD2} (main sleep)	f_{HIRC} = 32MHz		VDD=3V, SLEEP in Flash	1.1	1.5	mA
		f_{HIRC} = 16MHz			0.7	1.0	
		f_{XIN} = 16MHz			0.7	1.0	
		f_{HIRC} = 32MHz		VDD=3V, SLEEP in RAM, Flash power off	1.0	1.4	mA
		f_{HIRC} = 16MHz			0.6	0.8	
		f_{XIN} = 16MHz			0.6	0.8	
	I_{DD3} (sub run)	f_{SUB} = 32.768kHz (C_L: 7pF), or f_{WDTRC} = 40kHz	T_A=25°C	VDD=3V Code executed from Flash	10.0	18.0	uA
			T_A=85°C		15.0	22.9	
			T_A=105°C		20.0	30.0	
			T_A=25°C	VDD=3V, Code executed from RAM, Flash power off	9.0	17.1	uA
			T_A=85°C		14.0	25.8	
			T_A=105°C		18.0	28.9	
	I_{DD4} (sub sleep)	f_{SUB} = 32.768kHz (C_L: 7pF), or f_{WDTRC} = 40kHz	T_A=25°C	VDD=3V, SLEEP in Flash	1.9	4.8	uA
			T_A=85°C		4.5	15.8	
			T_A=105°C		9.0	21.0	
	I_{DD5}	VDD=3V DEEP SLEEP mode 0	T_A=25°C	RTCC/f_{SUB} Off	0.39	0.99	uA
			T_A=85°C		1.7	6.0	
			T_A=105°C		3.5	13.2	
			T_A=25°C	RTCC/f_{SUB} On	0.99	1.6	uA
			T_A=85°C		2.4	8.2	
			T_A=105°C		4.9	18.4	
	I_{DD7}	VDD=3V DEEP SLEEP mode 2	T_A=25°C	RTCC/f_{SUB} Off	0.29	0.7	uA
			T_A=85°C		0.7	2.5	
			T_A=105°C		1.3	5.2	
	I_{DD8}	VDD=3V DEEP SLEEP mode 3 (Shutdown)	T_A=25°C	All Off	36	72	nA
			T_A=85°C		0.2	1.2	uA
			T_A=105°C		0.7	2.3	

NOTES:

1. Where the f_{XIN} is an external main oscillator, the f_{SUB} is an external sub oscillator (ISET_I[2:0] = 0x5), and the f_{HIRC} is a high frequency internal RC oscillator.
2. All supply current items don't include the current of WDTRC oscillator and a peripheral block except when explicitly mentioned. However, it does include the current of the power-on reset (POR) block.

Figure 102. IDD4 (SLEEP mode, fSUB = 32.768 kHz) at VDD = 3V

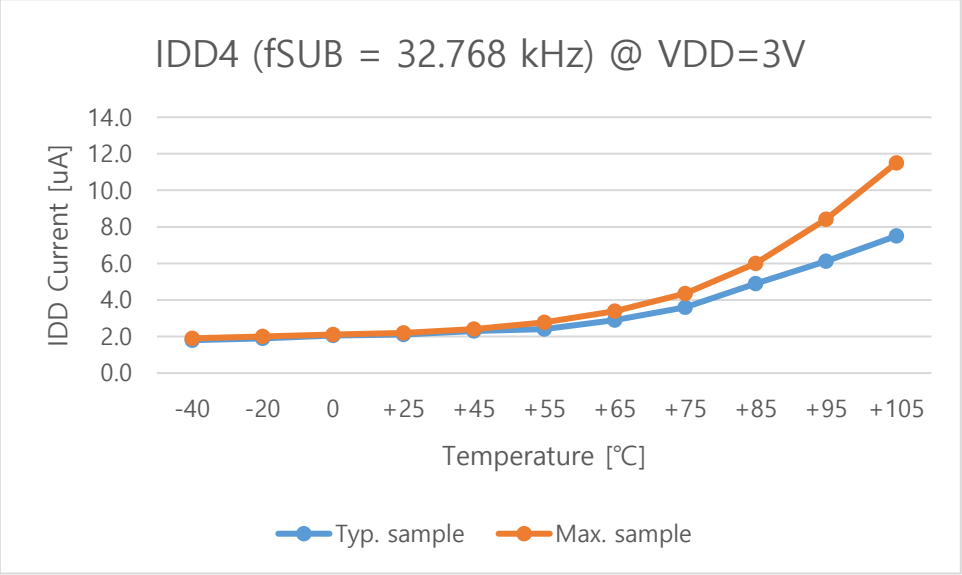

Figure 103. IDD4 (SLEEP mode, fWDTRC = 40 kHz) at VDD = 3V

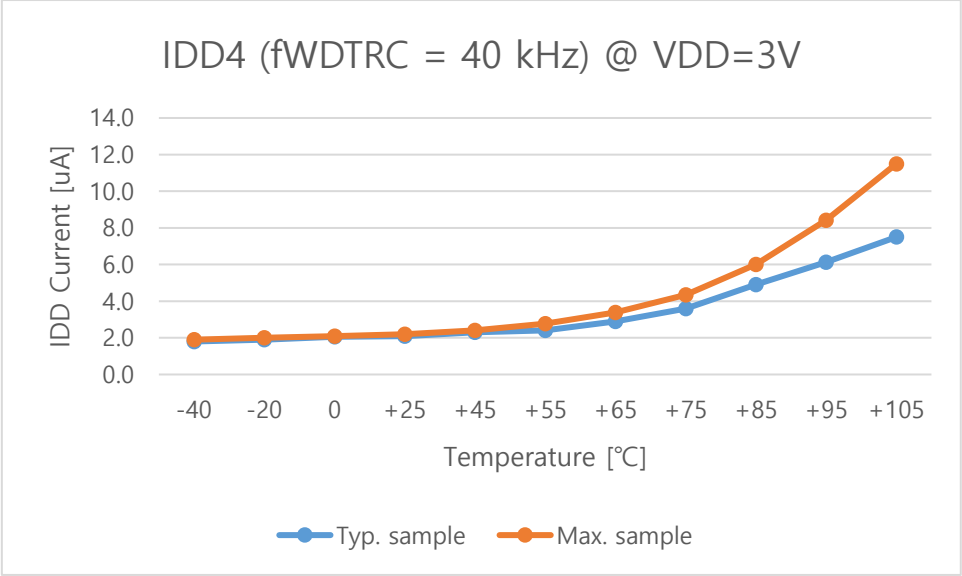

Figure 104. IDD5 (DEEP SLEEP mode 0, RTCC/fSUB Off) at VDD = 3V

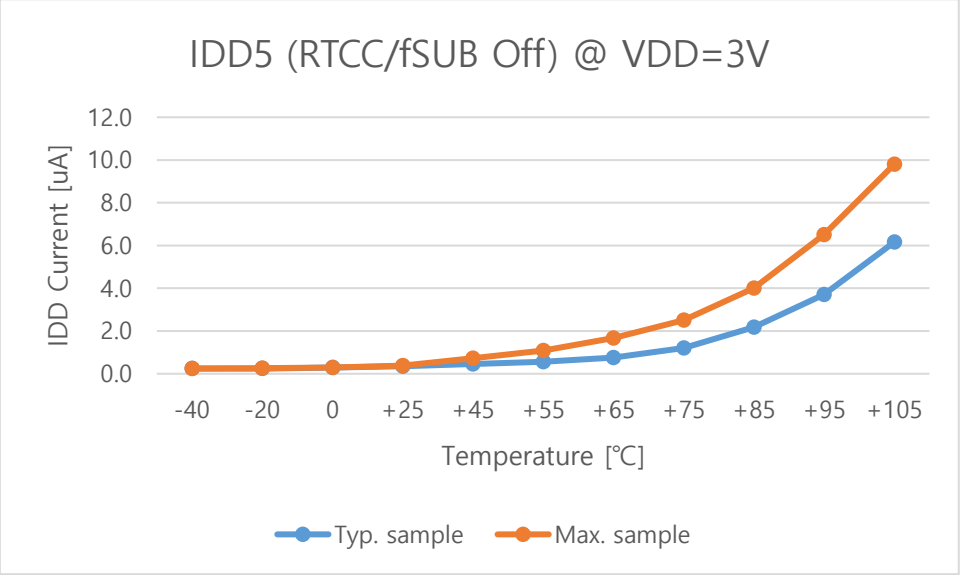

Figure 105. IDD5 (DEEP SLEEP mode 0, RTCC/fSUB On) at VDD = 3V

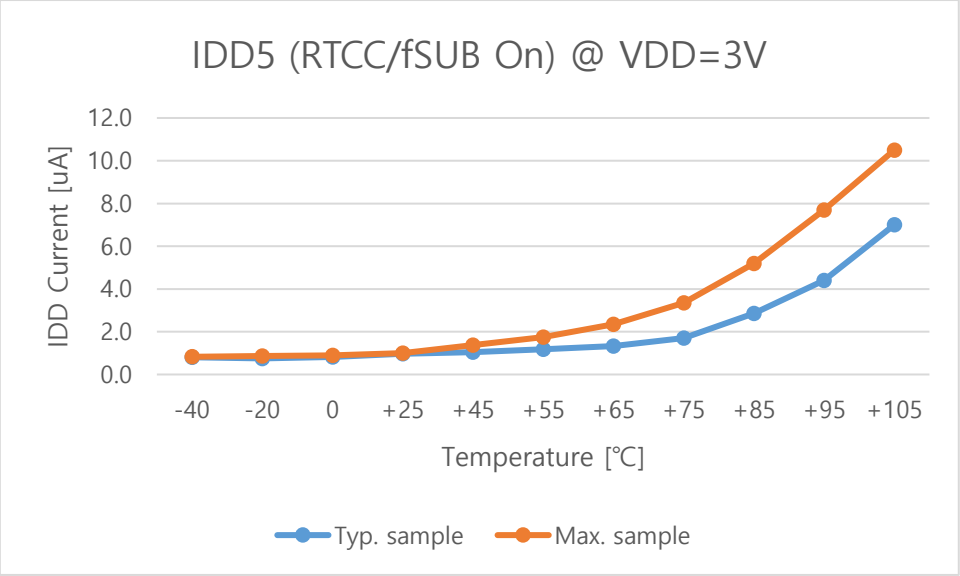

Figure 106. IDD7 (DEEP SLEEP mode 2) at VDD = 3V

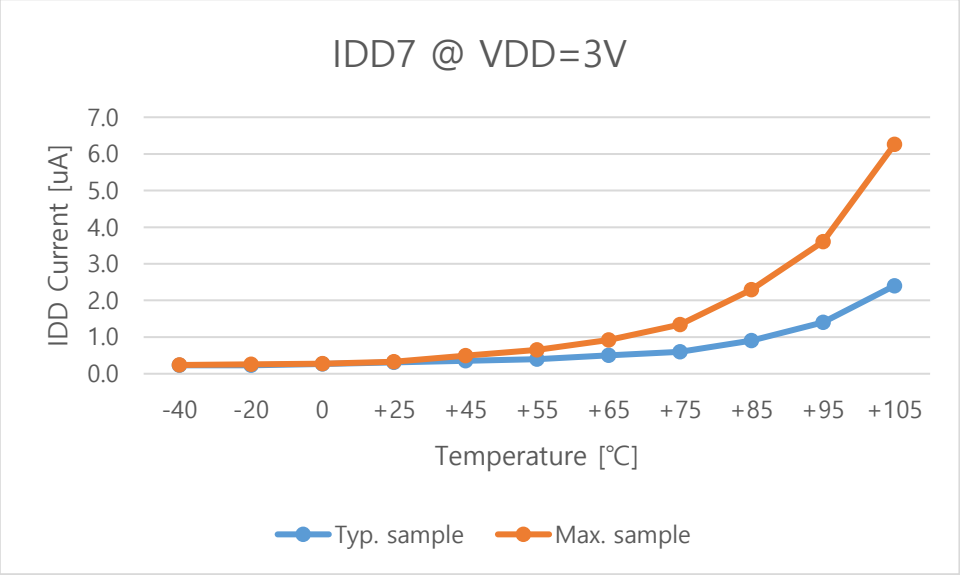

22.13 AC characteristics

Table 100. AC Characteristics

Parameter	Symbol	Conditions	Min	Typ	Max	Units
RESETB input low width	t_{RST}	VDD = 3 V	20	–	–	µs
Interrupt input high, low width	t_{IWH}, t_{IWL}	All interrupts, VDD = 3 V	50	–	–	ns
External counter input high, low pulse width	t_{ECWH}, t_{ECWL}	VDD = 3 V All external counter input	1	–	–	$1/f_{PCLK}$
External counter transition time	t_{REC}, t_{FEC}	ECn, VDD = 3 V All external counter input	–	–	10	ns
I/O frequency	f_{IO1}	VDD = 3.0V, C_L = 30pF, All except f_{IO2}	–	–	10	MHz
	f_{IO2}	VDD = 2.7V, C_L = 30pF, SPI pins	–	–	16	

Figure 107. AC Timing

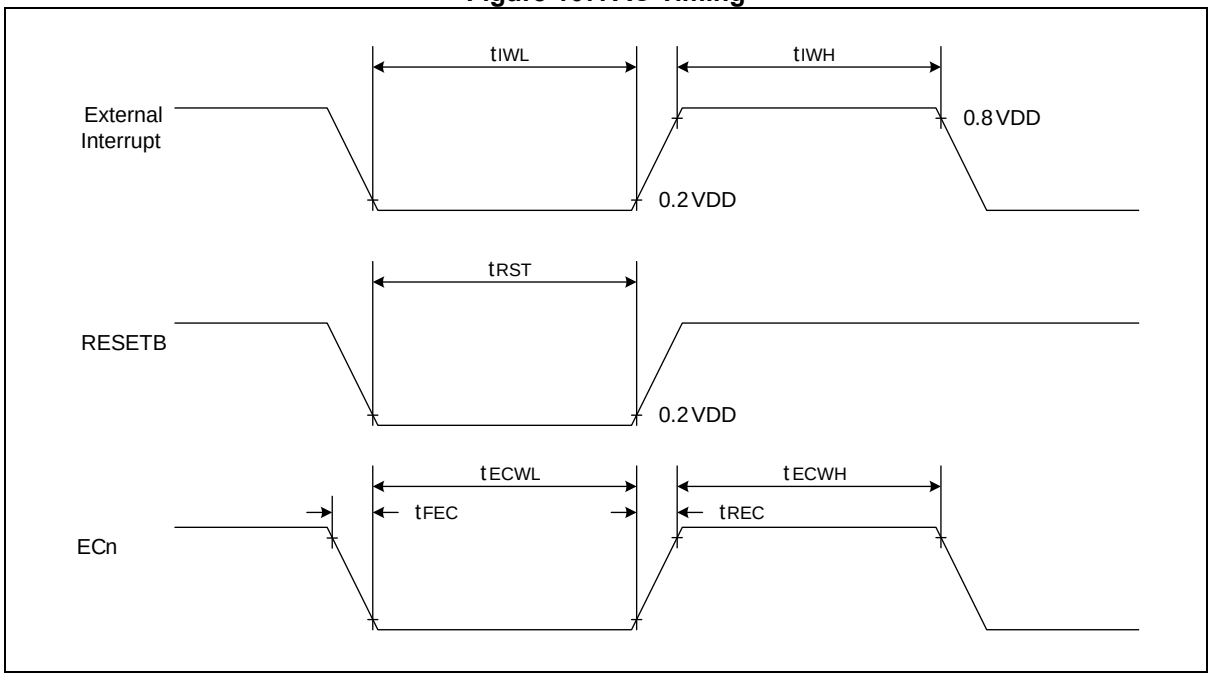

22.14 SPI characteristics

Table 101. SPI Characteristics

Parameter	Symbol	Conditions		Min	Typ	Max	Units
SPI clock frequency	f_{SCK}	VDD ≥ 2.7V	Internal SCK source External SCK source	–	–	16	MHz
	f_{SCK}	VDD ≥ 1.71V	Internal SCK source External SCK source	–	–	12	
Input/output clock high, low pulse width	t_{SCKH}, t_{SCKL}	Internal/External SCK source		0.8*Typ	t_{SCK}/2	1.2*Typ	ns
First output clock delay time	t_{FOD}	Internal/External SCK source, CPHA = 0		0.4*t_{SCK}	–	–	
Output clock delay time	t_{DS}	–		–	–	18	
Input setup time	t_{DIS}			13	–	–	
Input hold time	t_{DIH}			15	–	–	

Figure 108. SPI Timing

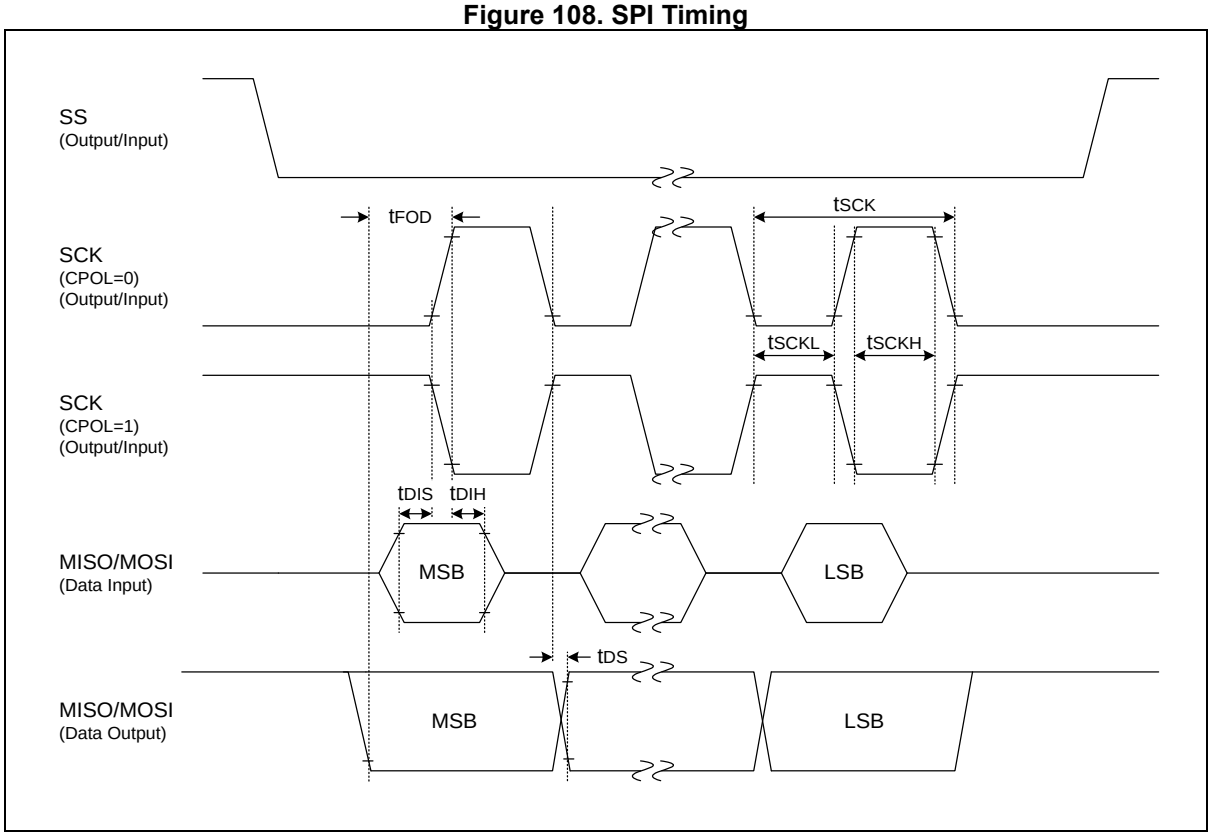

22.15 I2C characteristics

Table 102. I2C Characteristics

Parameter	Symbol	Standard		Fast		Fast Plus		Units
		Min	Max	Min	Max	Min	Max	
I2C operating voltage	–	VDD ≥ 1.71V		VDD ≥ 2V		VDD ≥ 2.7V		–
Clock frequency	t_{SCL}	0	100	0	400	0	1000	kHz
Clock high pulse width	t_{SCLH}	4.0	–	0.6	–	0.26	–	µs
Clock low pulse width	t_{SCLL}	4.7	–	1.3	–	0.5	–	
Bus free time	t_{BF}	4.7	–	1.3	–	0.5	–	
Start condition setup time	t_{STSU}	4.7	–	0.6	–	0.26	–	
Start condition hold time	t_{STHD}	4.0	–	0.6	–	0.26	–	
Stop condition setup time	t_{SPSU}	4.0	–	0.6	–	0.26	–	
Stop condition hold time	t_{SPHD}	4.0	–	0.6	–	0.26	–	
Output Valid from Clock	t_{VD}	0	–	0	–	0	–	
Data input hold time	t_{DIH}	0	–	0	1.0	0	0.45	
Data input setup time	t_{DIS}	250	–	100	–	50	–	ns

Figure 109. I2C Timing

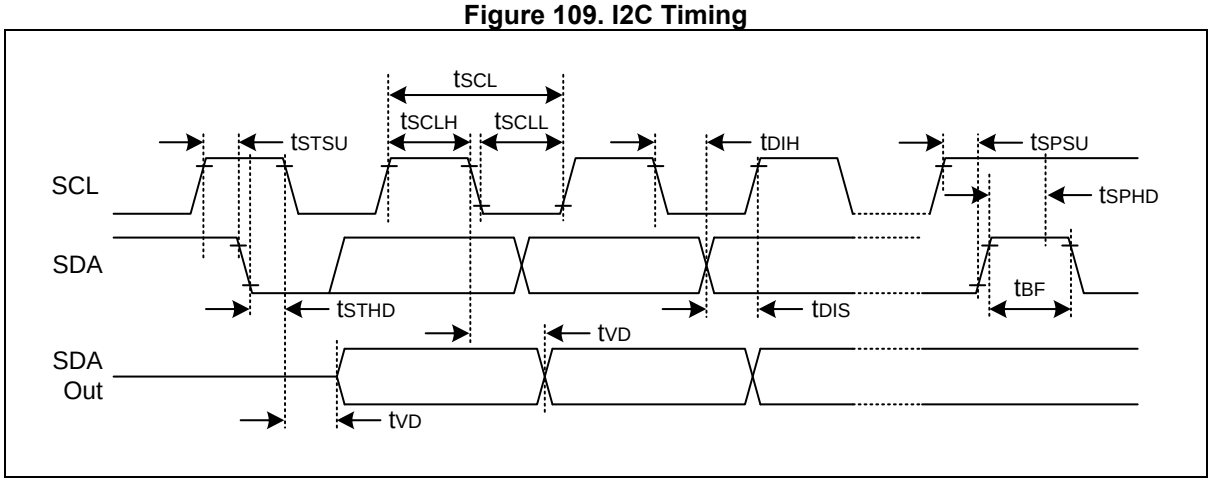

22.16 UART timing characteristics

Table 103. UART Timing Characteristics (PCLK=32MHz)

Parameter	Symbol	Min	Typ	Max	Units
Serial port clock cycle time	t_{SCK}	–	–	2000	kHz
Output data setup to clock rising edge	t_{S1}	t_{SCK} x 12/16	–	–	ns
Clock rising edge to input data valid	t_{S2}	–	–	t_{SCK} x 13/16	
Output data hold after clock rising edge	t_{H1}	–	–	50	
Input data hold after clock rising edge	t_{H2}	0	–	–	
Serial port clock High, Low level width	t_{HIGH}, t_{LOW}	t_{SCK} x 6/16	t_{SCK} x 8/16	t_{SCK} x 10/16	

Figure 110. UART Timing Characteristics

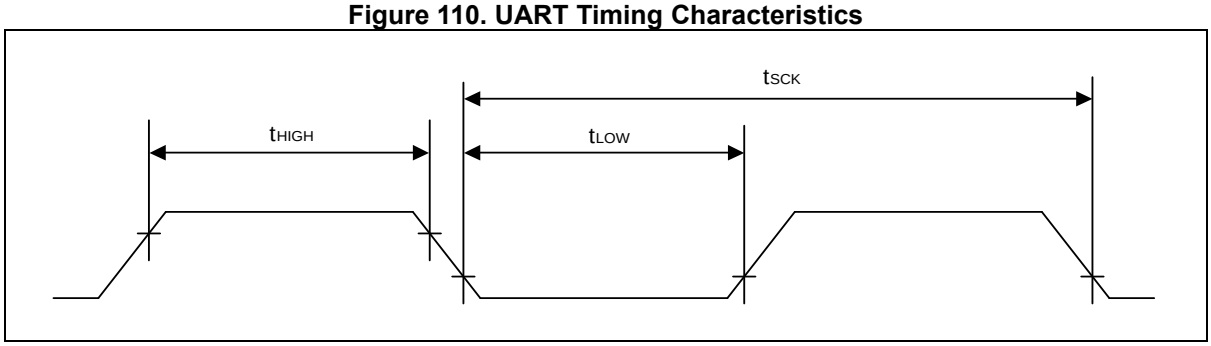

Figure 111. Timing Waveform of UART Module

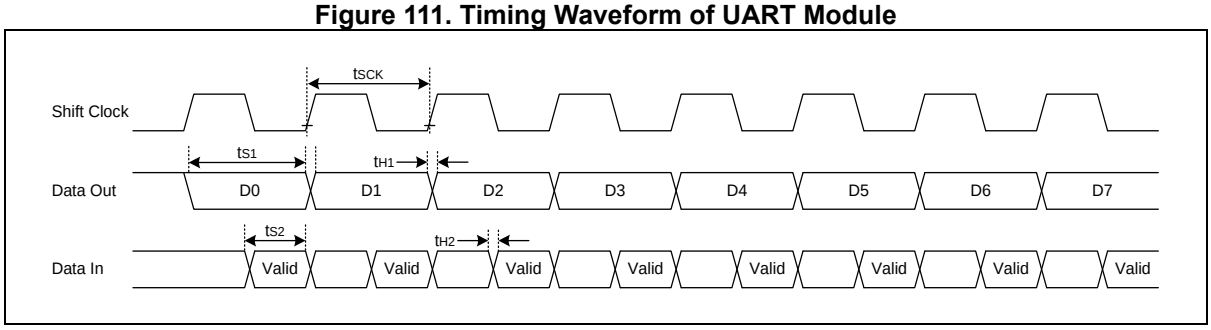

22.17 Data retention voltage in DEEP SLEEP mode 0

Table 104. Data Retention Voltage in DEEP SLEEP mode 0

Parameter	Symbol	Conditions	Min	Typ	Max	Units
Data retention supply voltage	V_{DDDR}	–	1.71	–	3.6	V
Data retention supply current	I_{DDDR}	• V_{DDDR} = 1.71V (T_A=25°C) • DEEP SLEEP mode 0	–	–	1	µA

22.18 Internal Flash memory characteristics

Table 105. Internal Flash Memory Characteristics

Parameter	Symbol	Conditions		Min	Typ	Max	Units
Page write time	t_{FSW}	–		–	3.0	3.5	ms
Page erase time	t_{FSE}	–		–	3.0	3.5	
Chip erase time	t_{FCE}	–		–	3.0	3.5	
Program voltage	V_{PGM}	On erase/write		2.0	–	3.6	V
System clock frequency	f_{HCLK}	–		2.0	–	–	MHz
Flash Memory Endurance of Write/Erase	NF_{FWE}	• Page 0 to 255 • Configure Option Page 1	T_A=25 °C, Page unit	10,000	–	–	Cycles
		Configure Option Page 2/3		100,000			
Retention time	t_{FRT}			10	–	–	Years

22.19 Input/output capacitance

Table 106. Input/Output Capacitance

(VDD = 0V)

Parameter	Symbol	Conditions	Min	Typ	Max	Units
Input capacitance	C_{IN}	• f=1MHz • Unmeasured pins are connected VSS	–	–	10	pF
Output capacitance	C_{OUT}					
I/O capacitance	C_{IO}					

22.20 Main oscillator characteristics

Table 107. Main Oscillator Characteristics

(VDD = 1.8V to 3.6V)

Oscillator	Parameter	Conditions	Min	Typ	Max	Units
Crystal	Main oscillation frequency	2.7 V to 3.6 V	2.0	–	16.0	MHz
Ceramic Oscillator	Main oscillation frequency	1.8 V to 3.6 V	2.0	–	4.2	
		2.7 V to 3.6 V	2.0	–	16.0	
External Clock	XIN input frequency	3.0 V to 3.6 V	2.0	–	32.0	MHz
	External Clock Duty Ratio	–	45	50	55	%

Figure 112. Crystal/Ceramic Oscillator

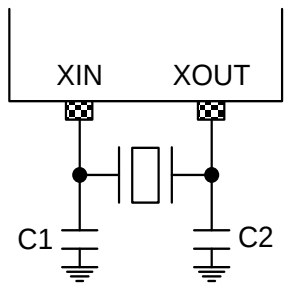

Figure 113. External Clock

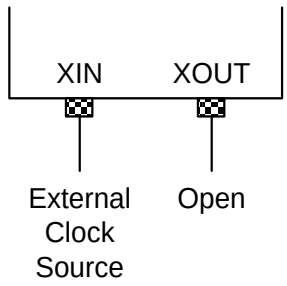

22.21 Sub-oscillator characteristics

Table 108. Sub-oscillator Characteristics

Oscillator	Parameter	Conditions	Min	Typ	Max	Units
Crystal	Sub oscillation frequency	1.71 V to 3.6 V	32	32.768	38	kHz

Figure 114. Crystal Oscillator

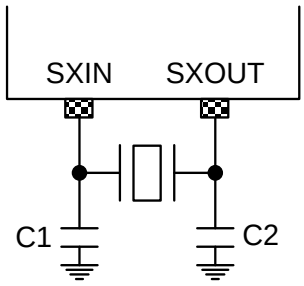

22.22 Main oscillation stabilization time

Table 109. Main Oscillation Stabilization Time

(VDD = 1.8V to 3.6V)

Oscillator	Conditions		Min	Typ	Max	Unit
Crystal	• f_{XIN} ≥ 2MHz • Oscillation stabilization occurs when VDD is equal to the minimum oscillator voltage range.	VDD = 2.7V to 3.6V	–	–	60	ms
Ceramic		VDD = 1.8V to 3.6V	–	–	10	
External clock	• f_{XIN} = 2.0 to 32MHz • XIN input high and low width (t_{XL}, t_{XH})		15.6	–	250	ns

Figure 115. Clock Timing Measurement at XIN

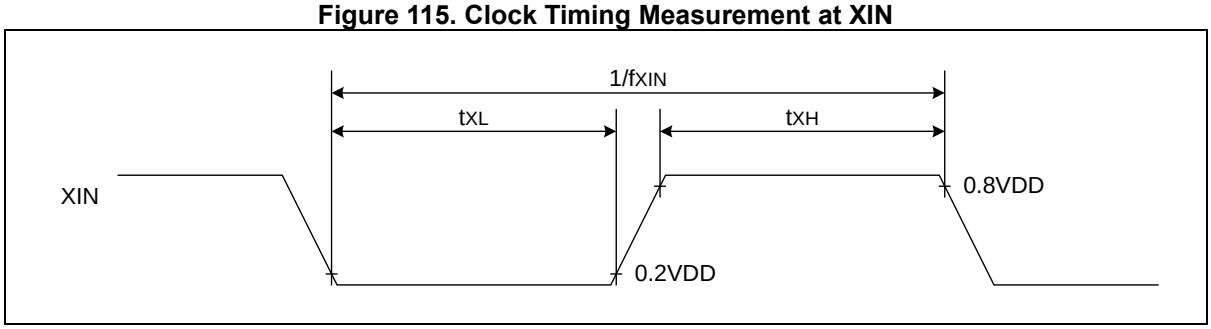

22.23 Sub-oscillation stabilization time

Table 110. Sub-oscillation Stabilization Time

Oscillator	Conditions	Min	Typ.	Max	Units
Crystal	–	–	–	10	sec
	VDD=3V, T_A=25 °C, ISET_I[2:0] = 0x7	–	0.7	1.5	

22.24 Operating voltage range

Figure 116. Operating Voltage Range

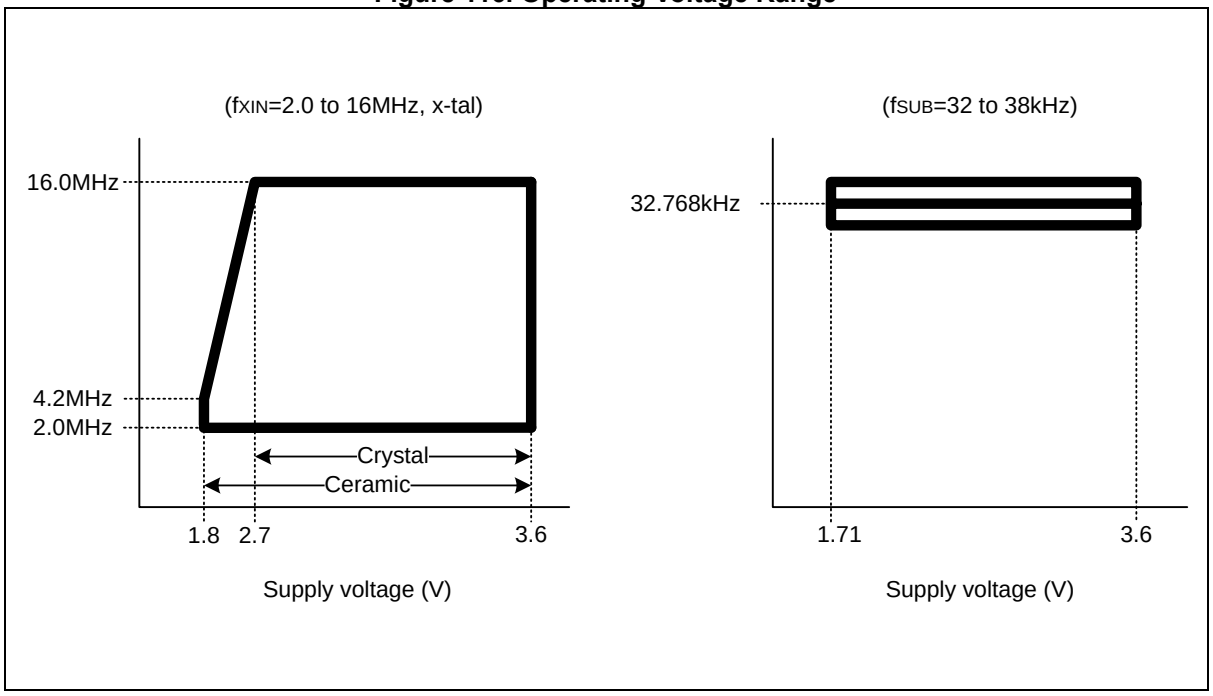

22.25 Recommended circuit and layout

Figure 117. Recommended Circuit and Layout

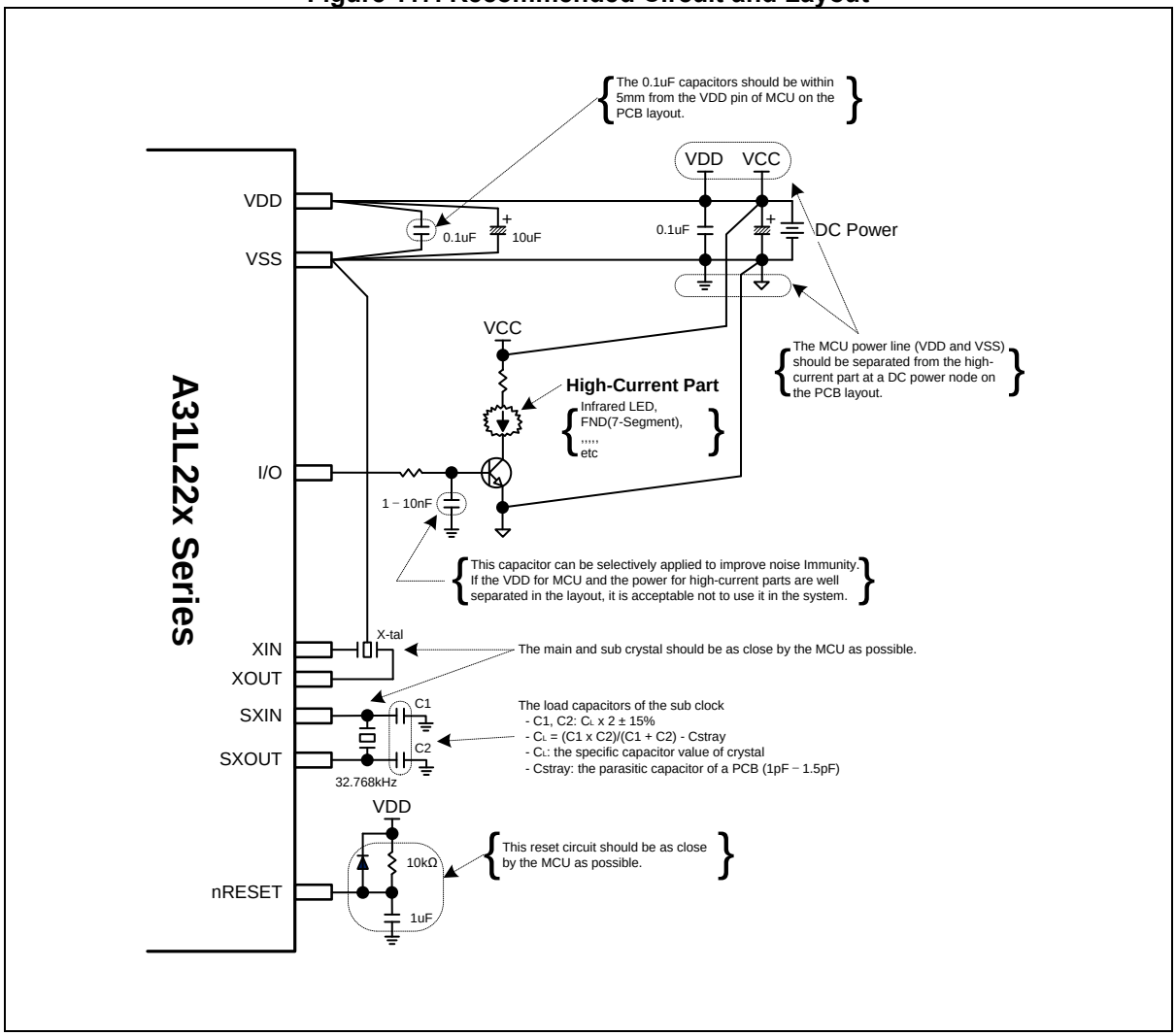

Figure 118. Recommended Circuit and Layout with SMPS Power

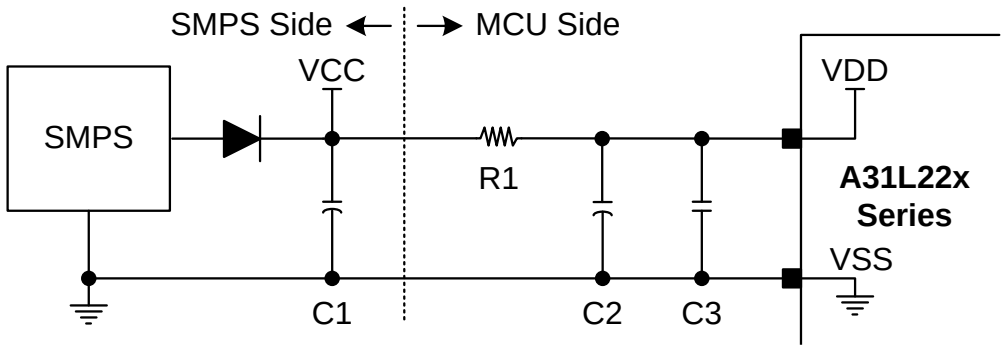

NOTES:

1. Capacitor C1 is to flatten out the voltage of the SMPS power, VCC.
   - Recommended C1: 470uF/25V more
2. Resistor R1 and capacitor C2 are the RC filter for VDD and suppress the ripple of VCC.
   - Recommended R1: 10Ω - 20Ω
   - Recommended C2: 47uF/25V more
   - The R1 and C2 should be as close by the C3 as possible.
3. Capacitor C3 is used for temperature compensation because an electrolytic capacitor becomes worse characteristics at low temperature.
   - Recommended C3: ceramic capacitor 2.2uF more.
   - C3 should be within 1cm from VDD pin of MCU on the PCB layout.
4. The above circuit is recommended to improve noise immunity (EFT, Surge, ESD, etc.) when the SMPS supplies the VDD of MCU.

23 Package information

23.1 20 TSSOP package information

Figure 119. 20 TSSOP Package Outline

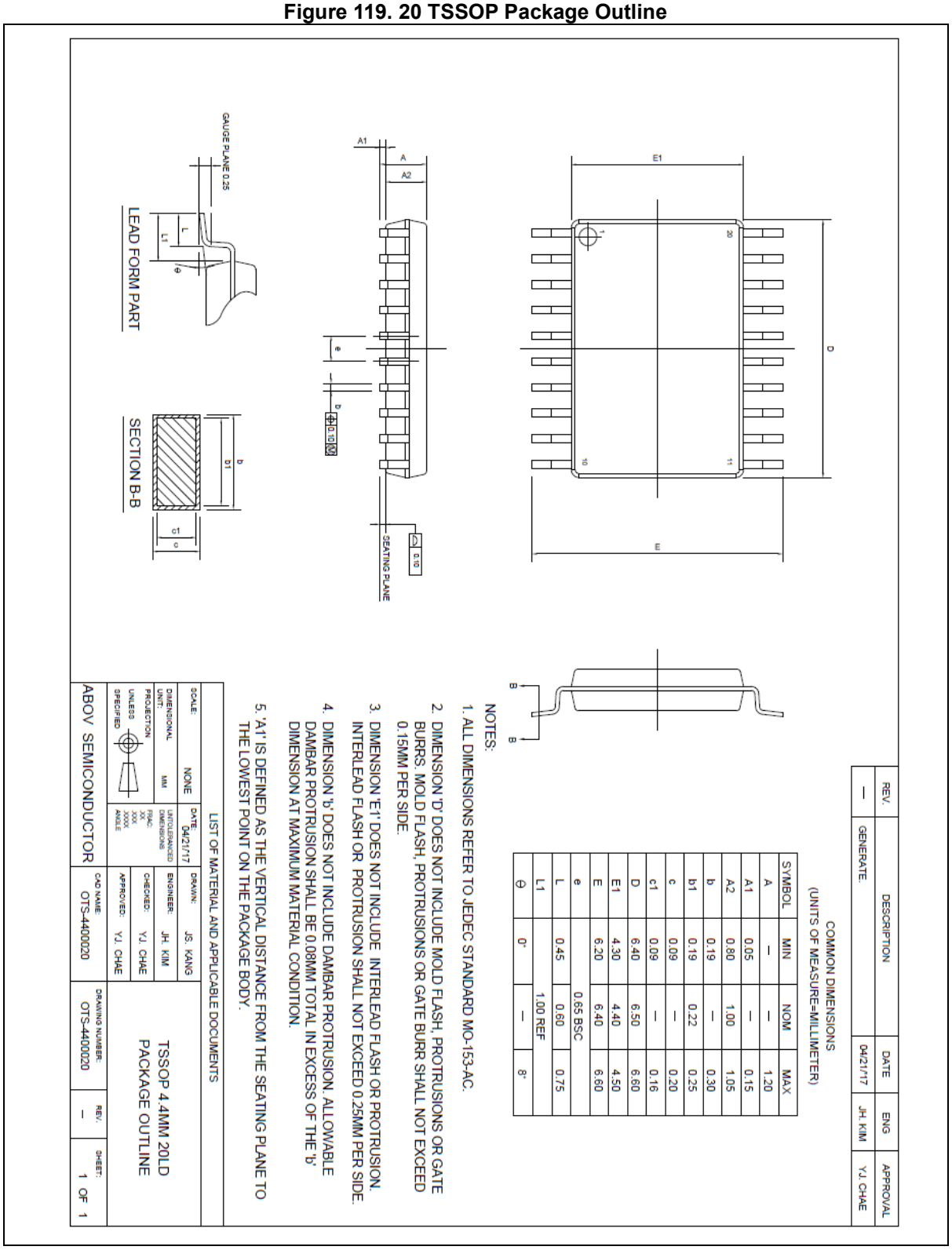

23.2 20 QFN package information

Figure 120. 20 QFN Package Outline

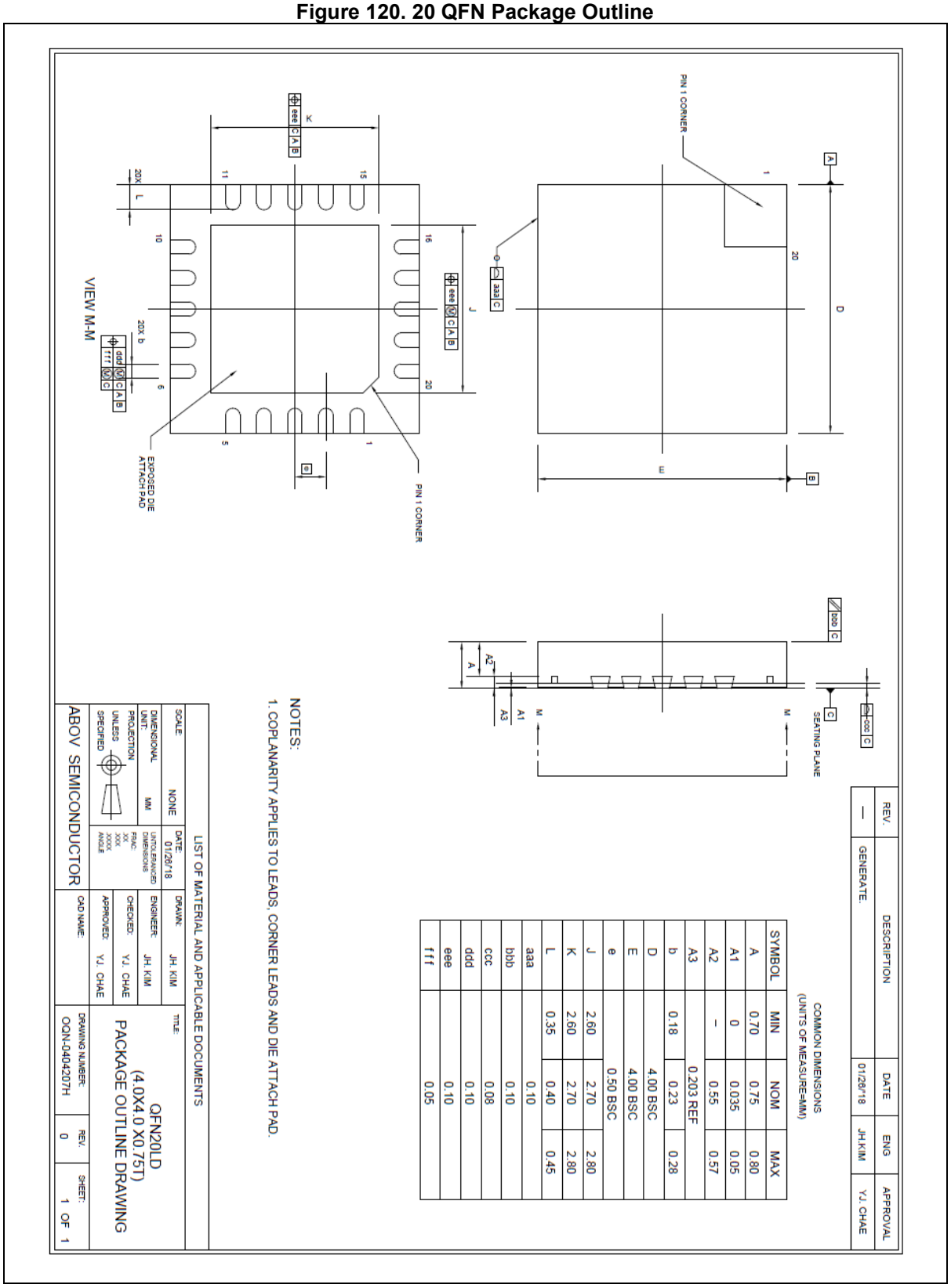

23.3 16 TSSOP package information

Figure 121. 16 TSSOP Package Outline

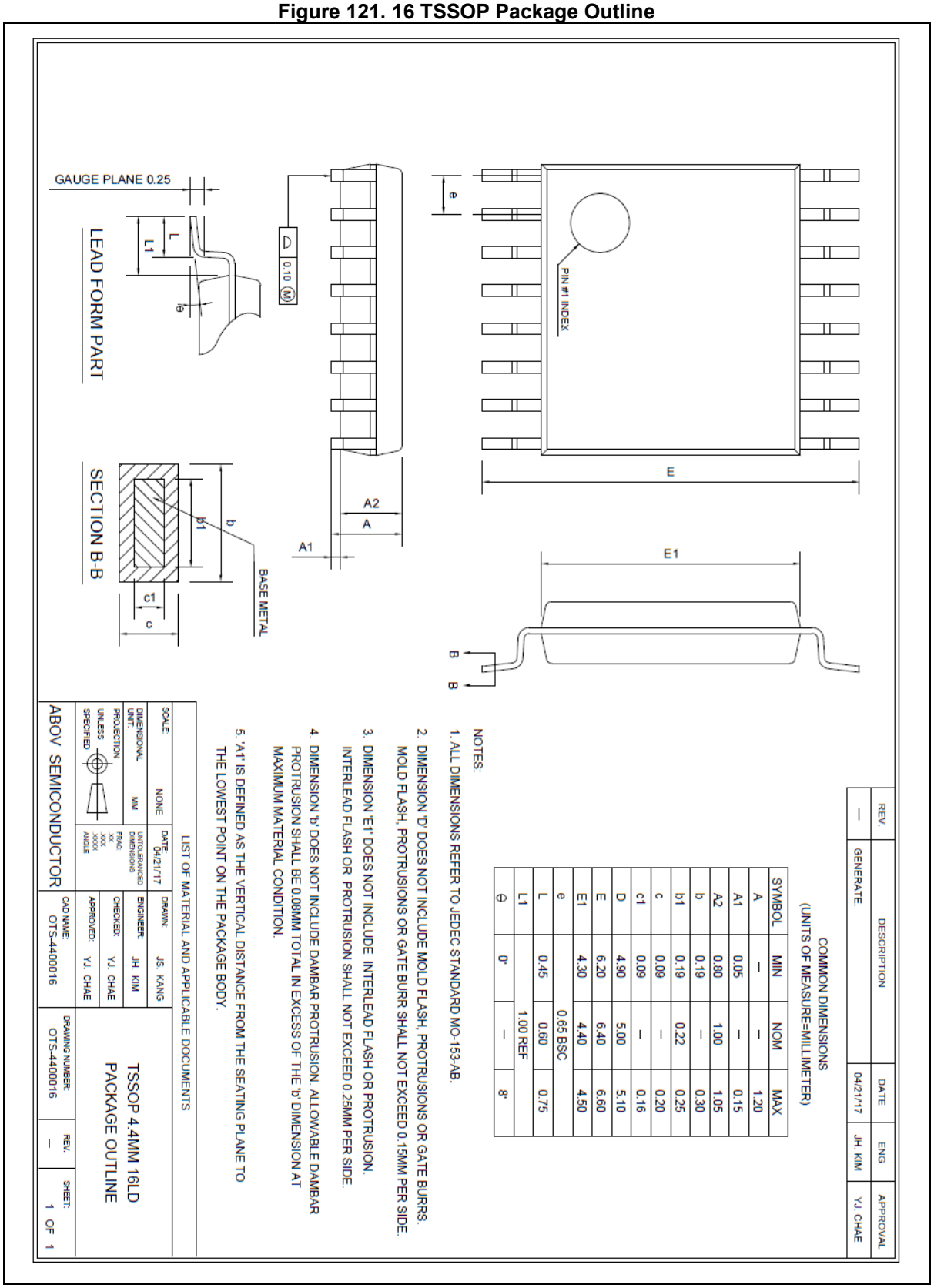

24 Ordering information

Table 111. A31L22x Series Ordering Information

Part Number	Flash	SRAM	USART	UART	LPUART	I2C	SPI	TIMER	ADC	I/O	Package
A31L222FR	32KB	4KB	1	1	1	1	1	5	8ch	17	20TSSOP
A31L222FU*	32KB	4KB	1	1	1	1	1	5	8ch	17	20QFN
A31L222AR*	32KB	4KB	1	1	1	1	1	4	6ch	13	16TSSOP
A31L221FR*	16KB	4KB	1	1	1	1	1	5	8ch	17	20TSSOP
A31L221FU*	16KB	4KB	1	1	1	1	1	5	8ch	17	20QFN
A31L221AR*	16KB	4KB	1	1	1	1	1	4	6ch	13	16TSSOP

* For available options or further information on the devices marked with "*", please contact the ABOV sales office.

Figure 122. A31L22x Series Numbering Nomenclature

A31L22 2 F R 2 N (T)

A31L22 Family Name

Code memory size

2 32Kbytes
1 16Kbytes

Pin count

F 20 pins
A 16 pins

Package type

R TSSOP
U QFN1

Temperature

None -40 to +85℃ (commercial grade)
2 -40 to +105℃ (industrial grade)

Bonding wire

none Au wire
N Pd-Cu wire

Packing

(T) Tape & reel
(W) Wafer
(C) Chip carrier

NOTE: For more information on any aspect of this device, please contact your nearest distributor or the ABOV sales office.

25 Development tools

This chapter introduces various development tools for the A31L22x series. ABOV offers software tools, debuggers, and programmers to help users in generating right results to match target applications. ABOV supports the entire development ecosystem for the customers.

25.1 Compiler

ABOV semiconductor does not provide any compiler for the A31L22x series. However, since the A31L22x series has the ARM's high-speed 32-bit Cortex-M0+ Core as a CPU, users can use all kinds of third party's standard compiler such as Keil C Compiler.

These compilers' output debug information can be integrated with our A-Link and A-Link Pro. For more information regarding the A-Link and A-Link Pro, please visit ABOV website www.abovsemi.com.

25.2 Debugger

The A-Link and A-Link Pro support ABOV Semiconductor's A31L22x MCU emulation in SWD Interface. The A-Link and A-Link Pro use two wires interfacing between PC and MCU, which is attached to user's system. The A-Link and A-Link Pro can read or change the value of MCU's internal memory and I/O peripherals. In addition, the A-Link and A-Link Pro control MCU's internal debugging logic. This means A-Link and A-Link Pro control emulation, step run, monitoring and many more functions regarding debugging.

The A-Link and A-Link Pro run underneath MS operating system such as MS-Windows NT/2000/XP/Vista/7/8/8.1/10 (32-bit, 64-bit).

Programming information using the A-Link and A-Link Pro are provided in Figure 123. More detailed information about the A-Link and A-Link Pro, please visit our website www.abovsemi.com and download the debugger S/W and documents.

Figure 123. A-Link and Pin Descriptions

25.3 Programmer

25.3.1 E-PGM+

E-PGM+ is a single programmer, and allows a user to program on the device directly.

- ABOV devices supported
- 2 to 5 times faster than S-PGM+
- Main controller: 32-bit MCU @ 72MHz
- Buffer memory: 1MB

Figure 124. E-PGM+ (Single Writer) and Pin Descriptions

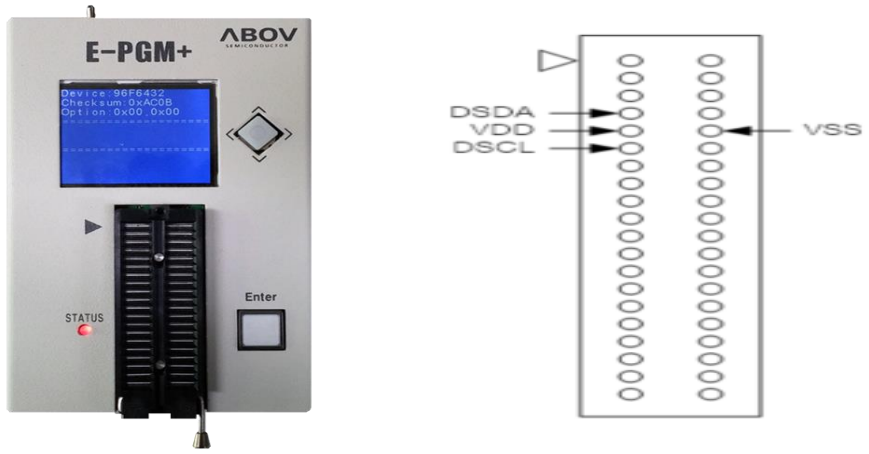

25.3.2 Gang programmer

E-Gang4 and E-Gang6 allows a user to program on multiple devices at a time. They run not only in PC controlled mode but also in standalone mode without PC control. USB interface is available and it is easy to connect to the handler.

Figure 125. E-Gang4 and E-Gang6 (for Mass Production)

25.4 SWD debug mode and E-PGM+ connection

Connections for SWD debugger interface or E-PGM+ is described in Figure 126.

Figure 126. Connection between A31L22x Series and E-PGM+ using SWD Debugger Interface

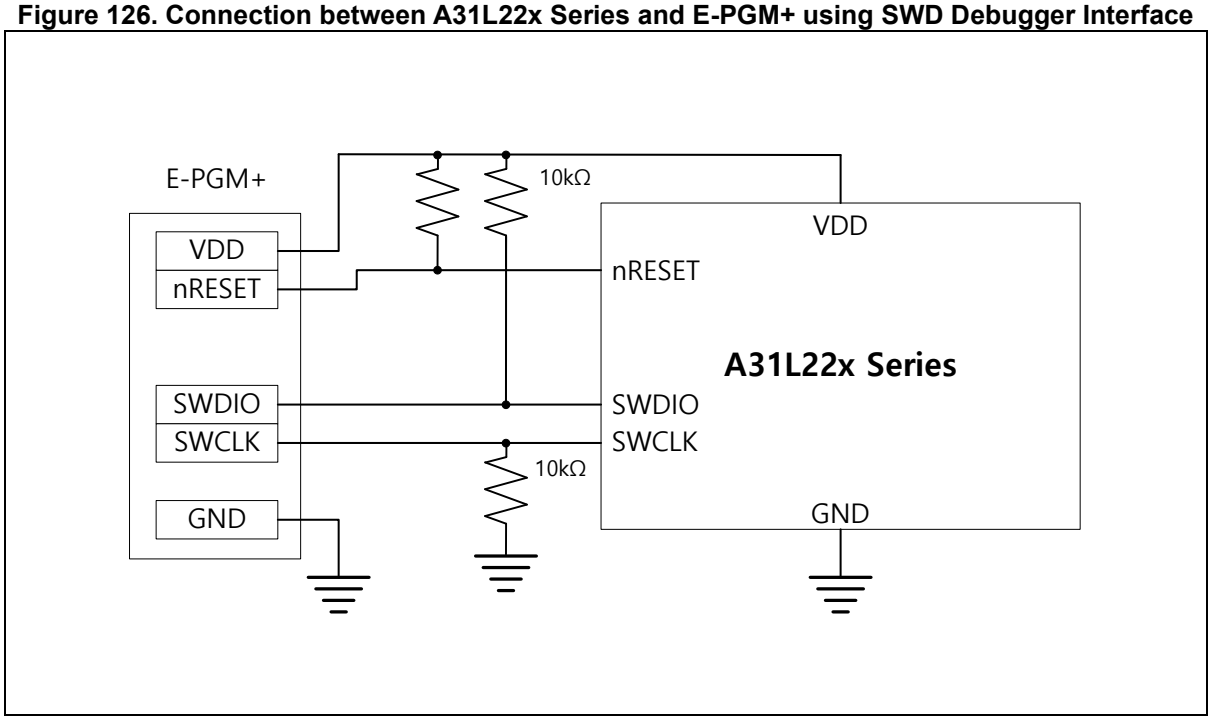

Revision history

Revision	Date	Notes
1.00	Feb. 27, 2023	1st creation
1.10	Dec. 2, 2024	Updated the disclaimer. Typos modify.

Korea

Regional Office, Seoul
R&D, Marketing & Sales
8th Fl., 330, Yeongdong-daero,
Gangnam-gu, Seoul,
06177, Korea

Tel: +82-2-2193-2200
Fax: +82-2-508-6903
www.abovsemi.com

HQ, Ochang
R&D, QA, and Test Center
37, Gangni 1-gil, Ochang-eup,
Cheongwon-gun,
Chungcheongbuk-do,
28126, Korea
Tel: +82-43-219-5200
Fax: +82-43-217-3534
https://www.abovsemi.com/en/main.php

Domestic Sales Manager
Tel: +82-2-2193-2206
Fax: +82-2-508-6903
Email: sales_kr@abov.co.kr

Global Sales Manager
Tel: +82-2-2193-2281
Fax: +82-2-508-6903
Email: sales_gl@abov.co.kr

China Sales Manager
Tel: +86-755-8287-2205
Fax: +86-755-8287-2204
Email: sales_cn@abov.co.kr

ABOV Disclaimer

IMPORTANT NOTICE – PLEASE READ CAREFULLY

ABOV Semiconductor ("ABOV") reserves the right to make changes, corrections, enhancements, modifications, and improvements to ABOV products and/or to this document at any time without notice. **ABOV DOES NOT GIVE WARRANTIES AS TO THE ACCURACY OR COMPLETENESS OF THE INFORMATION INCLUDED HEREIN.** Purchasers should obtain the latest relevant information of ABOV products before placing orders. Purchasers are entirely responsible for the choice, selection, and use of ABOV products and ABOV assumes no liability for application assistance or the design of purchasers' products. **NO LICENSE, EXPRESS OR IMPLIED, TO ANY INTELLECTUAL PROPERTY RIGHTS IS GRANTED BY ABOV HEREIN. ABOV DISCLAIMES ALL EXPRESS AND IMPLIED WARRANTIES AND SHALL NOT BE RESPONSIBLE OR LIABLE FOR ANY INJUIRES OR DAMAGES RELATED TO USE OF ABOV PRODUCTS IN SUCH UNAUTHORIZED APPLICATIONS.** ABOV and the ABOV logo are trademarks of ABOV. For additional information about ABOV trademarks, please refer to https://www.abov.co.kr/en/about/corporate_identity.php. All other product or service names are the property of their respective owners. Information in this document supersedes and replaces the information previously supplied in any former versions of this document.

© 2021 ABOV Semiconductor – All rights reserved